DENON

Hi-Fi Component

SERVICE MANUAL

MODEL DN-951FA

CD CART PLAYER

MODEL DN-961FA

CD PLAYER

DN-951FA

DN-961FA

— TABLE OF CONTENTS —

OPERATING INSTRUCTIONS ..... 2~22
SPECIFICATION ..... 23~33
NOTE FOR HANDLING OF LASER PICKUP 34,35
DISASSEMBLY ..... 36~54
ELECTRICAL ADJUSTMENT ..... 55~60
NOTE FOR PARTS LIST 61
PARTS LIST OF EXPLODED VIEW(DN-951FA) 62
PARTS LIST OF PACKING & ACCESSORIES(DN-951FA) 62
EXPLODED VIEW (DN-951FA) 63
EXPLODED VIEW (DN-961FA) 64
PARTS LIST OF EXPLODED VIEW(DN-961FA) 65
PARTS LIST OF PACKING & ACCESSORIES(DN-961FA) 65
PARTS LIST OF FG-952 MECHA UNIT(DN-951FA) 66
EXPLODED VIEW OF FG-952 MECHANISM UNIT(DN-951FA) 67
EXPLODED VIEW OF FG-961 MECHANISM UNIT(DN-961FA) 68
PARTS LIST OF FG-961 MECHANISM UNIT(DN-961FA) 69
P.W.BOARD & WIRING DIAGRAM ..... 70~72
PARTS LIST OF P.W.BOARD ..... 73~77
SEMICONDUCTORS ..... 78~87
SCHEMATIC DIAGRAM ..... 88~90

NIPPON COLUMBIA CO., LTD.

DENON

CD CART PLAYER

DN-951FA

OPERATING INSTRUCTIONS

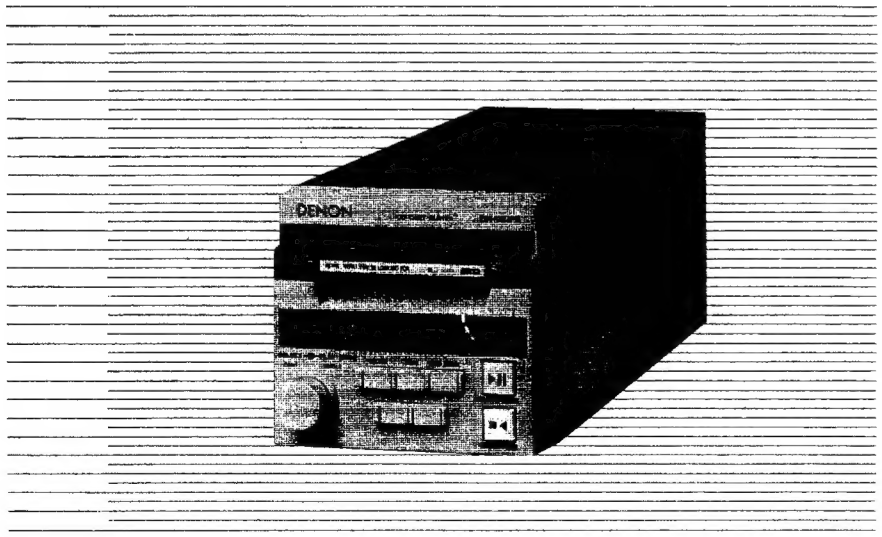

IMPORTANT TO SAFETY

WARNING:
TO PREVENT FIRE OR SHOCK HAZARD, DO NOT EXPOSE THIS APPLIANCE TO RAIN OR MOISTURE.

NOTE:
This CD player uses a semiconductor laser. To allow you to enjoy music with stable operation, we recommend to use it in a room whose temperature is between 5°C and 35°C.

Please check to make sure the following items, aside from the main unit, are packed in the carton.

(1) Operating instructions ..... 1 pc.
(2) Cartridge (ACD-5B) ..... 1 pc.
(3) 3P power supply cord ..... 1 pc.
(4) Spare fuse ..... 1 pc.

CAUTION:

1. **Handle the power supply cord carefully.**
   Do not damage or deform the power supply cord. If it is damaged or deformed, it may cause electric shock or malfunction when using. When disconnecting it from wall outlet, be sure to hold the plug attachment. Do not pull on the cord.
2. **Do not open the top cover.**
   In order to prevent electric shock, do not open the top cover. If problems occur, contact your DENON dealer.
3. **Do not place anything inside.**
   Do not place metal objects or spill liquid inside the CD player, as this may result in electric shocks or malfunction.

Please record and retain the model name and serial number of your set shown on the rating label.

Model No. DN-951FA Serial No. _____

TABLE OF CONTENTS

[1] GENERAL 3
Main Features 3
[2] DESCRIPTION OF THE FUNCTION 4
1) Names and Functions of the Parts 4, 5
2) Presettings ..... 6~10
3) Connections 10, 11
4) Housing Disc in and Removing Disc from Cartridge (ACD-5B) 11, 12
5) Loading and Unloading the Cartridge 12
[3] BASIC OPERATION 13
1) Before Starting 13
2) Selecting the Play Mode 13
3) Selecting Tracks 13
4) Selecting the Index Number 14
5) Starting Playback 15
6) Stopping Playback 15
7) Description of the PLAY/PAUSE, and STDBY/CUE Operations 16
8) Moving the Play Start Position 17
9) Checking the Play Start Position 18
10) End Monitor 18
11) Selecting the Track to be Played Next During Playback 19
12) Selecting the Index Number to be Played Next During Playback 20
13) Ending Playback 21
14) Resetting the Microprocessor 21
[4] BAR CODE AUTO TRACK SELECT SYSTEM 22
[5] CLEANING THE OPTICAL PICKUP LENS 23
[6] COMPACT DISCS 23
[7] TROUBLESHOOTING 23

[1] GENERAL

Main Features

The DN-951FA CD cart player is a table-top cartridge type CD player designed for use in broadcast stations, for production, etc.

1) A rotary pulse encoder is used for the selector which selects tracks and index numbers, making selection simple.
   When the selector is turned, the track or number display changes, the search operation starts immediately, and the pickup moves quickly to the play start position.
2) Playback signals are output immediately when the play mode is set.
   In addition, delay start can be preset.
3) The play time display can be switched between the remaining time and the elapsed time, depending on the purpose.
4) When the STDBY/CUE button is pressed during playback, the pickup moves to the position at which the play mode was last set and the standby mode is set, making it simple to check the track which is playing.
5) The last section of that track can be monitored by pressing the END MON (end monitor) button during the standby mode.
6) An E.O.M. (End of Message) signal can be emitted when near the end of playback to warn that playback is about to end.
7) The pickup can be moved to any position on the disc using the manual search operation.
8) The signals for the left and right channels can be mixed for mono output.
9) The playing speed can be varied within the range of 0 to ±3%, by 0.2% step.
10) Discs recorded on the CD cart recorder (DN-7700R) and not including TOCs can be played.
11) The player can be controlled externally via both parallel and serial remote connectors.
12) The player can be connected to the fader switch on a mixing control console and fade-started.
13) The cartridge system offers the following advantages:
    a) Discs (cartridges) can be loaded and replaced easily.
    b) The discs are protected from scratches, fingerprints, dust, etc., allowing stable playback over a long period of time.
    c) Even when the cartridge is loaded is sticks out partially, so title label can be attached to it and discs checked even when the cartridge is loaded.
    d) Discs can be stored and arranged right in the cartridges.
    e) A selection label can be attached to the cartridge to select and play a certain track.

2 DESCRIPTION OF THE FUNCTION

1) Names and Functions of the Parts

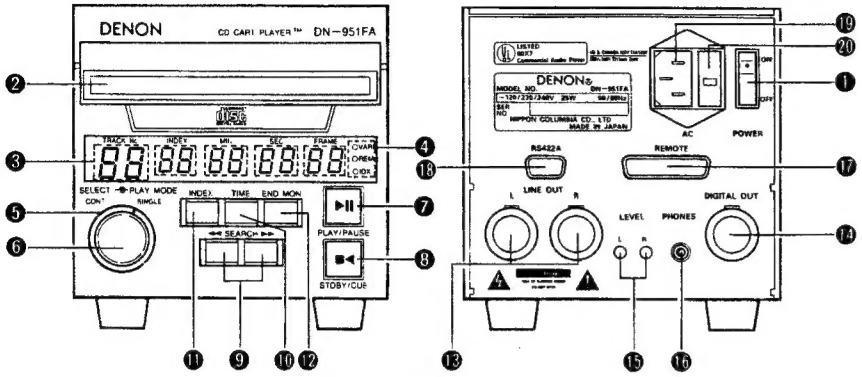

Figure 1

❶ POWER (Power Switch)
The power turns on when the POWER switch is set to the ON side, and turns off when the switch is set to the OFF side.

❷ Cartridge Tray
This is the tray for inserting a cartridge (ACD-5B).

❸ Display
The display window includes the "TRACK No.", "INDEX", "MIN", "SEC", and "FRAME" displays, and the "REM", "VARI", and "IDX" LEDs.

❹ "VARI", "REM" and "IDX" Indicators
VARI: This lights when the playing speed is set at anything other than standard. (Refer to presetting on page 9).
REM: This lights when the remaining time is displayed.
IDX: This lights when in the index selection mode.

❺ PLAY MODE (Play Mode Switch)
This is for switching the play mode between the single track mode (SINGLE) and continuous play mode (CONT.).

❻ SELECT (Selector Knob)
This knob is used to select track and index numbers.

❼ PLAY/PAUSE (Play/Pause Button)
This button is pressed to start playback, or during playback to set the pause mode.

❽ STDBY/CUE (Standby/Cue Button)
When this button is pressed during playback, the pickup returns to the position at which playback started, the standby mode is set, and the button lights (yellow).

❾ SEARCH (Search Buttons)
These buttons are used to change the position for starting playback.

❿ TIME (Time Button)
This button is used to switch the time display between the elapsed time and remaining time.

⓫ INDEX (Index Button)
This button is used to switch between the track selection mode and index number selection mode.

⓬ END MON (End Monitor Button)
This button is pressed during the standby mode to play the last section of the track.
* For instructions on setting the playing time, refer to d5-5, 6 and 7 under "Presettings" on Page 9.

⓭ LINE OUT L/R (Output Connectors)
1) These are active balanced type outputs using XLR type connectors.
Connect them to balanced type inputs with an impedance of 600 ohms on an amplifier or console.
2) Signal layout
Pin 1 : Common
Pin 2 : Cold
Pin 3 : Hot
3) Applicable connector: Cannon XLR-3-11C or the equivalent
NOTE: Do not short-circuit the hot or cold pin with the common pin.

⓮ DIGITAL OUT (Digital Output Connector)
1) This is an active balanced type output using an XLR type connector.
Connect it to the balanced type digital input on an amplifier or console.
2) Signal layout
Pin 1 : Common
Pin 2 : Cold
Pin 3 : Hot
3) Applicable connector: Cannon XLR-3-11C or the equivalent
NOTE: When using the digital output, set preset item d3-8 to "1".

⓯ LEVEL L/R (Output Level Controls)
These adjust the level of the audio signals output from the LINE OUT L/R ⓭ connectors.

⓰ PHONES (Headphones Jack)
Connect headphones with an impedance of 30 to 40 ohms.

⓱ REMOTE (Remote Control Connector)
1) This is a connector for parallel remote connection.
The player can be controlled remotely with a dry contact circuit connection.
2) Applicable connector: 25-pin D-sub plug
3) Signal layout

Pin No.		Signal	I/O	Level	
1		FG	–		
	14	PLAY TALLY	O	TTL	(Iol=48 mA)
2		PLAY COMMAND	I	HCMOS	(Ii=–3 mA)
	15	PAUSE TALLY	O	TTL	(Iol=48 mA)
3		PAUSE COMMAND	I	HCMOS	(Ii=–3 mA)
	16	STDBY/CUE TALLY	O	TTL	(Iol=48 mA)
4		STDBY/CUE COMMAND	I	HCMOS	(Ii=–3 mA)
	17	INDEX 2/3 TALLY	O	TTL	(Iol=48 mA)
5		TRACK (+) COMMAND	I	HCMOS	(Ii=–3 mA)
	18	NC	–		
6		TRACK (–) COMMAND	I	HCMOS	(Ii=–3 mA)
	19	NC	–		
7		SEARCH (FWD) COMMAND	I	HCMOS	(Ii=–3 mA)
	20	NC	–		
8		SEARCH (REV) COMMAND	I	HCMOS	(Ii=–3 mA)
	21	NC	–		
9		FADER START	I	PHOTO COUPLER	(Ii=–10 mA)
	22	TALLY POWER SUPPLY	O	+5 V, 20 mA	
10		COMMAND COMMON	–		
	23	COMMAND COMMON	–		
11		NC	–		
	24	E.O.M./INDEX 2/INDEX 3	O	DRY CONTACT	
12		NC	–		
	25	E.O.M./INDEX 2/INDEX 3	O	DRY CONTACT	
13		NC	–		

⓲ RS422A (Remote Control Connector)
1) This is a connector for serial remote connection.
The player can be connected to and controlled from a personal computer or other external controller.
2) Applicable connector: 9-pin D-sub plug
3) Baud rate: 9600bps
4) Signal layout

Pin No.		Signal	I/O	Level
1		F.GROUND	–	
	6	S.GROUND	–	
2		TxD (RETURN)	O	RS422A
	7	TxD	O	RS422A
3		RxD	I	RS422A
	8	RxD (RETURN)	I	RS422A
4		NC	–	
	9	NC	–	
5		NC	–	

⓳ AC (AC Inlet)
Insert the included power cord here.

⓴ Fuse Holder
- To replace the fuse, use small screwdrivers, etc., to push the catches (A) and (B) at the top and bottom of the holder inward and remove the fuse holder outward.
- Replace the old fuse with one with the rating indicated on the panel.
Type of fuse: T1.00 A 125 V for 120 V operation
T315 mA 250 V for 230/240 V operation

• PRESET VOLTAGE CHANGE
DN-951FA allows selection of either 120 V, 230 V or 240 V operation. The unit has been preset at 240 V prior to shipment except for U.S.A. & Canada. In order to use the unit at 120 V or 230 V, follow the procedures below.
1. The fuse holder serves as a voltage selector.
2. Turn the voltage selector block so that the proper voltage setting (120 or 230) appears in the indication window and refit it.
Be sure to replace a fuse described in the above when operate the unit with 120 V.
3. Press in the fuse holder back to the main body. Make sure of the click action of the fixing tabs for secure fitting.

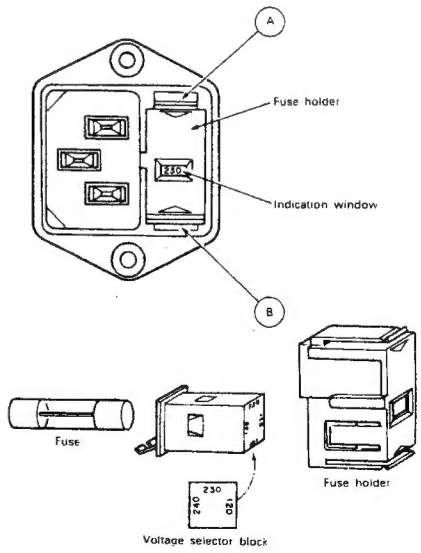

Figure 2

2) Presettings

- Setting procedure

①

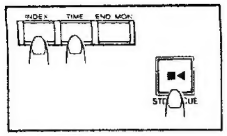

* The presettings can only set when no cartridge (disc) is loaded or when cartridge (disc) is loaded and in the standby mode.
Press the STDBY/CUE button once while holding in the INDEX and TIME buttons. The "d1" preset mode (for example d1 01 10 00 00) appears on the display, and the settings can now be changed.
(The LED flashes where you can change modes.)

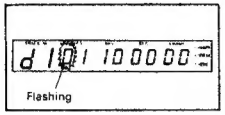

* To change the setting from "d1" to "d2", "d3", etc., press the STDBY/CUE button the number of times necessary while holding in the INDEX and TIME buttons.

→ d1 → d2 → d3 → d4 → d5 → d6 → d7 ——— End of preset setting mode

②

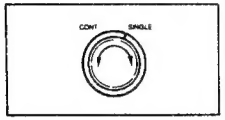

- Turn the SELECT knob to change the position which is flashing.
The flashing position moves to the right when the knob is turned clockwise, and to the left when the knob is turned counterclockwise.

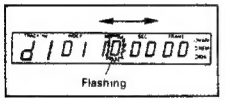

③

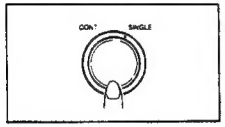

- Press the SELECT knob to change the "0" or "1" setting.
The INDEX x 10 indicator on the display window changes from "0" to "1". Press the knob again to change the setting back from "1" to "0".

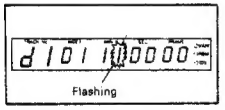

* [1] indicates the setting is turned on.
[0] indicates the setting is turned off.
Set to on or off as necessary for that function.

Figure 3

To turn off the preset setting mode:
Repeat step ① above, press the STDBY/CUE button until "d7" is displayed, then press it once again. The new preset setting mode is memorized. The display reads as it was before the settings were started.

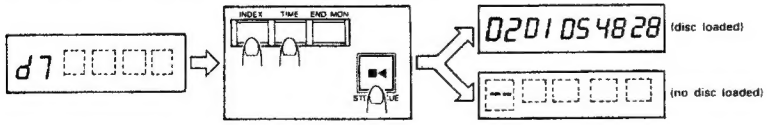

Figure 4

- **Table of preset functions (Note:** [0] and [1] indicate settings upon shipment from the factory.)

TRACK No.		INDEX		MIN		SEC		FRAME	
		Bit 1	Bit 2	Bit 3	Bit 4	Bit 5	Bit 6	Bit 7	Bit 8
		[0]	[1]	[1]	[0]	[0]	[0]	[0]	[0]
d	1	MONO	CUE DETECT LEVEL			FADE IN DURATION			–
		[1]	[1]	[0]	[1]	[0]	[0]	[1]	[0]
d	2	FRAME DISP	INI-DISP	–	END DETECT	RE CUE	PLAY LOCK	FLASH	–
		[0]	[0]	[0]	[1]	[0]	[0]	[0]	[0]
d	3	REMOTE INHIB	SWITCH INHIB	END OF MESSAGE			–	–	DIGITAL OUT
		[0]	[0]	[1]	[0]	[0]	[0]	[0]	[0]
d	4	TEST	VARI ENABLE	BAR CODE	–	DERAY START		CDR DISC	NEXT TRACK
		[0]	[1]	[0]	[1]	[0]	[1]	[0]	[0]
d	5	INDEX INHIB	INDEX 3/2	EOM /INDEX	FADER MODE	END MONITOR			INDEX 2
		[0]	[1]	[0]	[1]	[1]	[0]	[0]	[0]
d	6	VARIABLE SPEED				SKIP TRACK	END MARK	–	–
		[0]	[0]	[0]	[0]	[0]	[0]	[0]	[0]
d	7	PLAYER ID				–	–	–	–

- **Description of preset functions**

(off = 0, on = 1. The "*" mark indicates settings upon shipment from the factory.)

[d1-1] MONO
* [0]: L/R stereo signals output.
[1]: L/R signals output mixed.

[d1-2, 3 and 4] CUE DETECT LEVEL:

	[d1-2]	[d1-3]	[d1-4]	Detection level
	0	0	0	–∞
	1	0	0	–72 dB
	0	1	0	–66 dB
*	1	1	0	–60 dB
	0	0	1	–54 dB
	1	0	1	–48 dB
	0	1	1	–42 dB
	1	1	1	–36 dB

[d1-5, 6 and 7] FADE IN DURATION:

	[d1-5]	[d1-6]	[d1-7]	Fade in time
*	0	0	0	0
	1	0	0	10 msec
	0	1	0	30 msec
	1	1	0	53 msec
	0	0	1	106 msec
	1	0	1	148 msec
	0	1	1	185 msec
	1	1	1	247 msec

[d2-1]	FRAME DISPLAY		[0]:	Frame not displayed during playback.
		*	[1]:	Frame displayed during playback.
[d2-2]	INITIAL DISPLAY		[0]:	Elapsed time displayed when power turned on.
		*	[1]:	Remaining time displayed when power turned on.
[d2-4]	END DETECT		[0]:	Track ends not detected during search operation.
		*	[1]:	Track ends detected during search operation.
[d2-5]	RE CUE	*	[0]:	Stop mode set when playback ends.
			[1]:	When playback ends, pickup returns to starting position and standby mode set.
[d2-6]	PLAY LOCK	*	[0]:	Buttons other than the ones below also function during playback.
			[1]:	Buttons other than the PLAY MODE, TIME, PLAY/PAUSE and RESET buttons do not function during playback.
[d2-7]	FLASH		[0]:	PLAY indicator remains turned off (without flashing) during EOM operation, PAUSE indicator remains turned off when playback ends, and STDBY/CUE indicator remains turned off during search operation.
		*	[1]:	PLAY indicator flashes during EOM operation, PAUSE indicator flashes when playback ends, and STDBY/CUE indicator flashes during search operation.
[d3-1]	REMOTE INHIBIT	*	[0]:	"REMOTE" command accepted.
			[1]:	"REMOTE" command not accepted.
[d3-2]	SWITCH INHIBIT	*	[0]:	No front panel buttons other than PLAY MODE, TIME and RESET buttons function.
			[1]:	All buttons function.

[d3-3, 4 and 5] E.O.M.: (PLAY/PAUSE button flashes green)

	[d3-3]	[d3-4]	[d3-5]	E.O.M. time setting
	0	0	0	E.O.M. not output
	1	0	0	5 sec
*	0	1	0	10 sec
	1	1	0	15 sec
	0	0	1	20 sec
	1	0	1	25 sec
	0	1	1	30 sec
	1	1	1	35 sec

[d3-8]	DIGITAL OUT	*	[0]:	Standard playback mode. Only audio data output from digital output.
			[1]	Digital output priority mode. Audio data and subcodes output from digital output. DSP functions (FADE IN, MONO) inhibited.
[d4-1]	TEST	*	[0]:	Standard playback mode. (Always leave this at [0]. The player cannot be used if set to [1].)
[d4-2]	VARIABLE SPEED ENABLE			
		*	[0]:	Discs played at standard speed.
			[1]:	Discs played at speed set by variable speed presetting [d6-1, 2, 3 and 4].
[d4-3]	BAR CODE		[0]:	Bar code plate function inhibited.
		*	[1]:	When cartridge with bar code plate inserted, standby mode set at track indicated by bar code.

[d4-5, 6] DELAY START:

	[d4-5]	[d4-6]	Delay start time setting
*	0	0	0 msec
	1	0	100 msec
	0	1	200 msec
	1	1	300 msec

[d4-7]	CDR DISC	*	[0]:	Mode for playing normal discs including TOCs. (Discs without TOCs cannot be played.)
			[1]:	Discs recorded on a CD recorder (DN-7700R, etc.) without TOCs can be played.
[d4-8]	NEXT TRACK STANDBY			
		*	[0]:	When playback ends, next operation performed according to "RE CUE" setting.
			[1]:	When playback ends, standby mode set at next track. ("RE CUE" setting ignored.)
[d5-1]	INDEX INHIBIT	*	[0]:	Index numbers can be selected.
			[1]:	Index numbers cannot be selected.
[d5-2]	INDEX 3/2		[0]:	"INDEX 2 TALLY" output from REMOTE connector pins 24 and 25. (Not valid when [d5-3] set to [1].)
		*	[1]:	"INDEX 3 TALLY" output from REMOTE connector pins 24 and 25. (Not valid when [d5-3] set to [1].)
[d5-3]	EOM/INDEX	*	[0]:	"INDEX TALLY" (set by INDEX 3/2 [d5-2]) output from REMOTE connector pins 24 and 25.
			[1]:	"EOM TALLY" output from REMOTE connector pins 24 and 25.
[d5-4]	FADER START MODE SELECT			
			[0]:	Player starts when fader switch turned on.
		*	[1]:	Player starts when fader switch turned on, set to pause mode when fader switch turned off.

[d5-5, 6 and 7] END MONITOR:

	[d5-5]	[d5-6]	[d5-7]	End monitor time setting
	0	0	0	End monitor off.
	1	0	0	5 sec
*	0	1	0	10 sec
	1	1	0	15 sec
	0	0	1	20 sec
	1	0	1	25 sec
	0	1	1	30 sec
	1	1	1	35 sec

[d5-8]	INDEX 2	*	[0]:	"INDEX 3 TALLY" output from REMOTE connector pin 17.
			[1]:	"INDEX 2 TALLY" output from REMOTE connector pin 17.

[d6-1, 2, 3 and 4] VARIABLE SPEED: This sets the playing speed within a range of 0 to 3% when [d4-2] is set to [1].

	[d6-1]	[d6-2]	[d6-3]	[d6-4]	Playback speed
	0	0	0	0	0.0% (Standard speed)
	1	0	0	0	+0.2%
	0	1	0	0	+0.4%
	1	1	0	0	+0.6%
	0	0	1	0	+0.8%
	1	0	1	0	+1.0%
	0	1	1	0	+1.2%
	1	1	1	0	+1.4%
	0	0	0	1	+1.6%
	1	0	0	1	+1.8%
*	0	1	0	1	+2.0%
	1	1	0	1	+2.2%
	0	0	1	1	+2.4%
	1	0	1	1	+2.6%
	0	1	1	1	+2.8%
	1	1	1	1	+3.0%

[d6-5]	SKIP TRACK		[0]:	Skip track playback as set in the TOC is possible when playing CDR discs.
		*	[1]:	Skip track playback as set in the TOC is not possible when playing CDR discs.
[d6-6]	END MARK	*	[0]:	The track end position does not change even if the PLAY/PAUSE button is pressed during the end monitor mode.
			[1]:	The position at which the PLAY/PAUSE button is pressed during the end monitor function becomes the track end position.

[d7] PLAYER ID: Set to 4-bit (binary) to control the player with commands including IDs from the RS-422A connector.
* When several units are connected via the RS-422A connector, separate IDs must be set for each of them.

	[d7-1]	[d7-2]	[d7-3]	[d7-4]	ID
*	0	0	0	0	0
	1	0	0	0	1
	0	1	0	0	2
	1	1	0	0	3
	0	0	1	0	4
	1	0	1	0	5
	0	1	1	0	6
	1	1	1	0	7
	0	0	0	1	8
	1	0	0	1	9
	0	1	0	1	10
	1	1	0	1	11
	0	0	1	1	12
	1	0	1	1	13
	0	1	-	1	14
	1	1	1	1	15

- **Resetting to the default settings**
  Turn the POWER switch on while holding in the INDEX and TIME buttons.
  All values are reset to the values indicated on the "Table of preset functions".

3) Connections

3)-1 Output signal connections

① Analog output signal connections
Connect the player's output connectors (LINE OUT L and R) ⓲ to the balanced inputs on an amplifier or console using 3-pin cords.

② Digital output signal connections
To use the digital output, connect the player's output connector (DIGITAL OUT) ⓳ to the balanced digital input on an amplifier or console using a 3-pin cord.

NOTES:
1) When using the digital output, set preset item d3-8 to "on".
2) To send the digital output to an unbalanced circuit, do so via a balanced/unbalanced conversion circuit.

Balanced/unbalanced conversion circuit

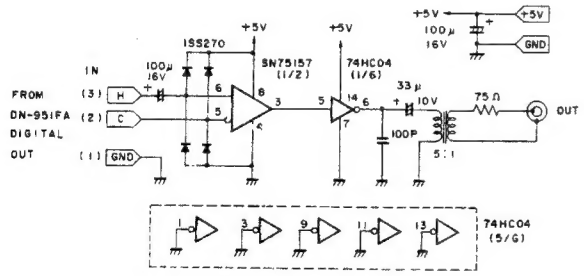

Figure 5

3)-2 Remote signal connections

① Parallel remote signal connections
To use the player remotely, connect the remote connector (REMOTE) ⓱ with the remote control circuit using a 25-pin D-sub cord.
NOTE: When using parallel remote connections, set preset item d3-1 to "off".

② Serial remote signal connections
To use the player connected to a controller or personal computer, connect the remote connector (RS422A) ⓰ to the controller using a 9-pin D-sub cord.

3)-3 Power supply connections

Connect the player to a power supply with the preset voltage (as shown on the fuse holder window) using the included power cord. Make sure the POWER switch is turned off when doing so.

3)-4 Remote control connections

To control the DN-951FA remotely, refer to the example of remote control connections given below.

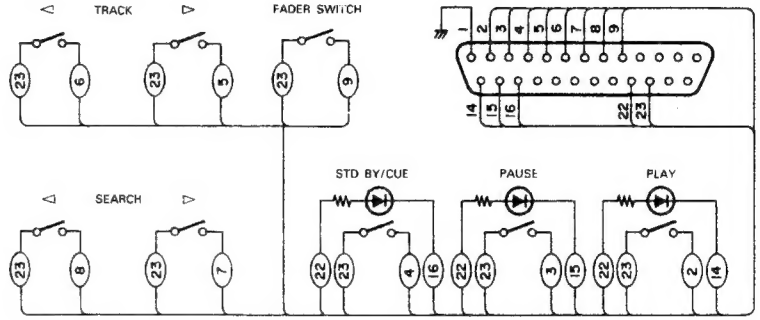

Figure 6

4) Housing Disc in and Removing Disc from Cartridge (ACD-5B)

To play a compact disc on this player, the disc must be housed in the exclusive cartridge and the cartridge must be loaded into the player. The feature of the ACD-5B cartridge is that it can be used to house and store the disc, and loaded as such into the player.

Procedure

① Housing and Removing Disc

1. To house the disc in the cartridge, open the cover in the direction of the arrow, then insert the disc with the labelled side (printed side) facing upward.
2. To remove the disc from the cartridge, hold the center hole of disc with one finger and another along the outside of the disc.
   Note: Be careful not to touch the recorded surface of the disc, or fingerprints may cause skips.

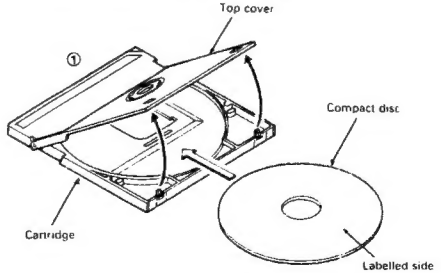

② Loading the Cartridge

Load the cartridge in the direction of the arrow (↑).
(Check that the cartridge is placed in the proper direction.)

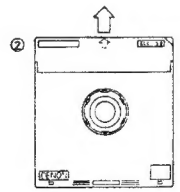

Figure 7

③ Fastening the Cartridge Top Cover

Put the included screw (M2x4 CBTS-P) through the back of the cartridge and tighten it into the top cover so that the cartridge will not open.

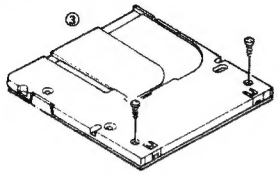

④ Indicates the position for attaching the title label

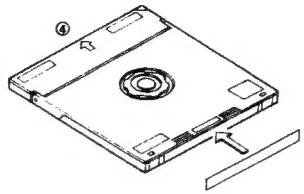

Figure 8

Note:

1. Do not subject the cartridge to strong shocks or drop it from high places, or this may damage it.
2. Do not store for long periods of time in hot, humid places or in direct sunlight, as this may cause the cartridge to change colors or warp.

5) Loading and Unloading the Cartridge

① Loading the Cartridge

Load the cartridge slowly and firmly.

Insert the cartridge into the cartridge tray by pressing on the front center.

When it is fully inserted, the cartridge tray is lowered and the disc is loaded.

Note:

- Be sure to load the cartridge in the proper direction.
- Only use DENON-specified cartridges. Otherwise, the loading mechanism or disc may be damaged.
- When the disc is housed improperly in the cartridge, the "TRACK No." displays "00" after the cartridge is loaded into the unit.
- If the disc is dirty or scratched, the player will not cue the beginning of the track when the cartridge is loaded. In this case, error message numbers ("84","85","86","87" or "88") will be displayed on the SEC windows to show kind of failure. If this happens, house the disc properly or replace the disc.

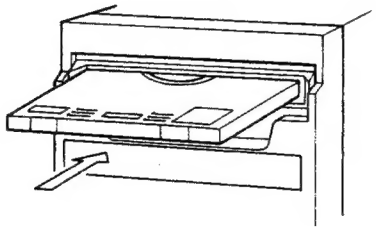

② Unloading the cartridge

To unload the cartridge, gently lift the lower center part of the protruding portion of the cartridge tray. The cartridge tray will rise to its original position and the cartridge will be pushed out from the cartridge tray, at which point it can be removed.

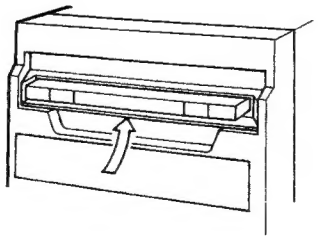

Figure 9

3 BASIC OPERATION

1) Before Starting

① Turn the power on.
② Load a cartridge.
③ Set the presettings according to the purpose. (Refer to "Presettings" on Page 6.)
* Steps ② and ③ above can be performed in reverse order.

2) Selecting the Play Mode

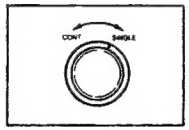

- Set the PLAY MODE selector to SINGLE or CONT.

3) Selecting Tracks

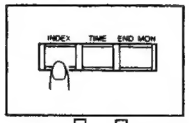

- Set the track selection mode. (The IDX LED should be off.) If the IDX LED is on, press the INDEX button to turn it off.

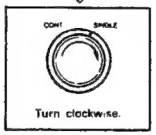

The track number changes as follows (for a disc containing four tracks):

→ 01 → 02 → 03 → 04 →

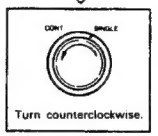

The track number changes as follows (for a disc containing four tracks):

← 01 ← 02 ← 03 ← 04 ←

* If the SELECT knob is pressed in and turned, the track number increases or decreases by 10 tracks per step.

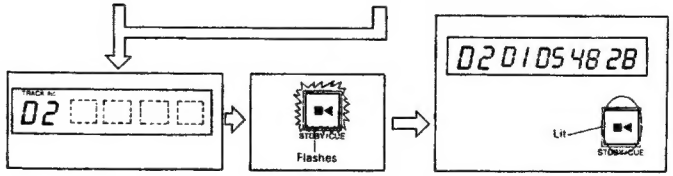

- When a track is selected, that track number is displayed. (In this case track 2 is selected.)
- The STDBY/CUE indicator flashes during the search operation.
- When the search operation is completed, the time is displayed and the STDBY/CUE indicator stops flashing, remaining lit.

Figure 10

- If the selected track does not exist on the disc, the TRACK No. display flashes. Check the track numbers.

4) Selecting the Index Number

There is no need to select index numbers when starting from the beginning of a track.

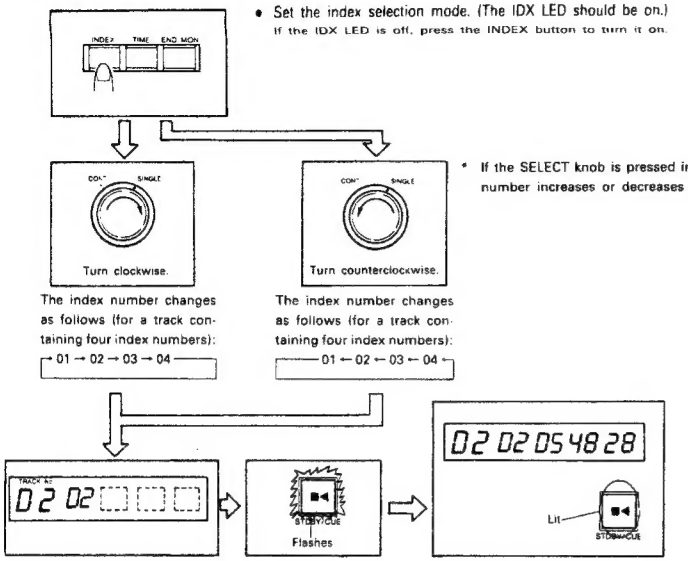

- Set the index selection mode. (The IDX LED should be on.)
  If the IDX LED is off, press the INDEX button to turn it on.
- If the SELECT knob is pressed in and turned, the index number increases or decreases by 10 index per step.
- When an index number is selected, that index number is displayed.
  (In this case index number 2 is selected.)
- The STDBY/CUE indicator flashes during the search operation.
- When the search operation is completed, the time is displayed and the STDBY/CUE indicator stops flashing, remaining lit.

Figure 11

- If the selected index number does not exist on that track, the INDEX display flashes. Check the index numbers.
- Select the index number after selecting the track. If a track is selected after an index number, that index number is cleared.

5) Starting Playback

Playback starts when the PLAY/PAUSE button is pressed during the pause or standby.
(Playback starts with no time delay, so songs can be switched smoothly.)

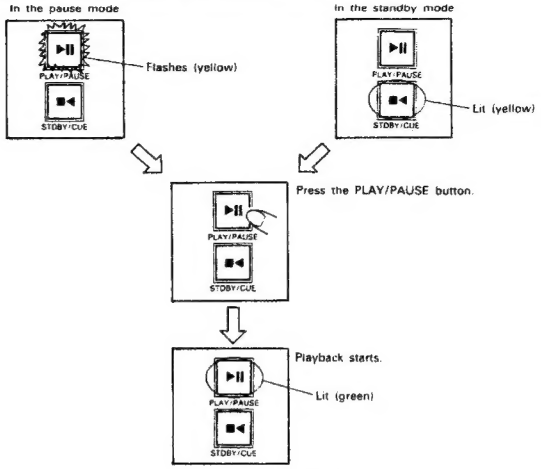

Figure 12

6) Stopping Playback

Playback can be stopped in the middle of a track either by pausing or by back-cuing.

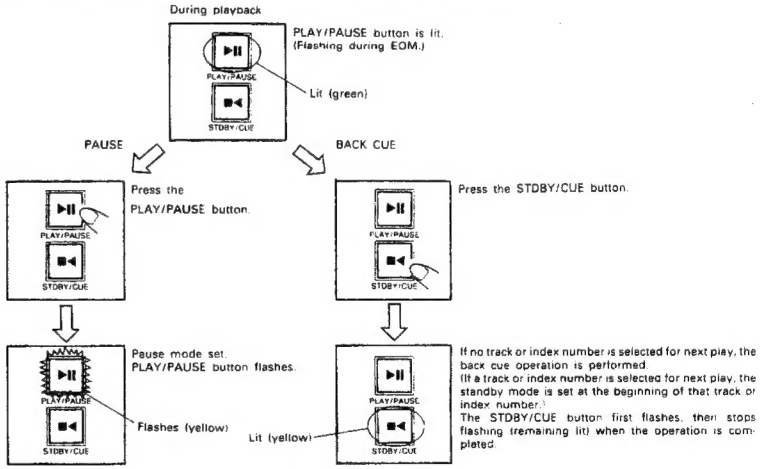

Figure 13

7) Description of the PLAY/PAUSE, and STDBY/CUE Operations

- Each press of the PLAY/PAUSE button causes the operation to change from play to pause or from pause back to play.
- The play operation of this CD player is performed via DSP (Digital Signal Processor) and memory, so the audio starts instantly after the PLAY/PAUSE button is pressed.
- Pressing the STDBY/CUE button during disc play resets the CD to the position at which play was started. (This is called the back cue function.)

The steps through which disc play is performed when the PLAY/PAUSE and STDBY/CUE buttons are pressed are described with the aid of the following illustrations in Figures 14 through 16.

PLAY and PAUSE

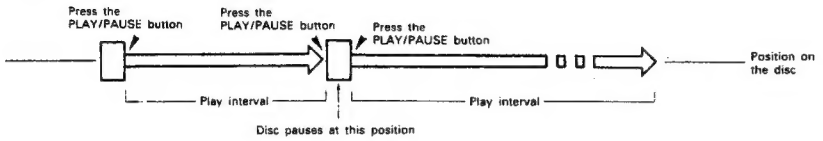

Figure 14

Pressing the PLAY/PAUSE button starts the disc play, the advancement of which is illustrated by the arrows of Figure 14. Pressing the PLAY/PAUSE button again during disc play causes the play operation to pause, and pressing this button once more causes the disc to be played again.

PLAY and CUE

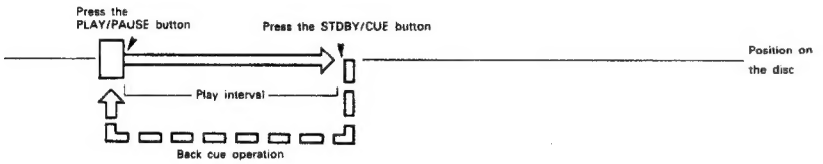

Figure 15

Pressing the PLAY/PAUSE button starts the disc. Pressing the STDBY/CUE button will reset the disc to the position where play was started. By alternately pressing the PLAY/PAUSE button and the STDBY/CUE button, the disc may be played from the same position any number of times. This function is called back cue.

PLAY, PAUSE, and CUE

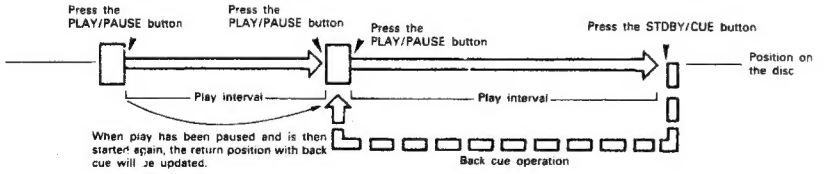

Figure 16

8) Moving the Play Start Position

When a track is selected and the PLAY/PAUSE button is pressed, playback begins from the beginning of that track. To start from a different position, use the following procedure to find the desired position.

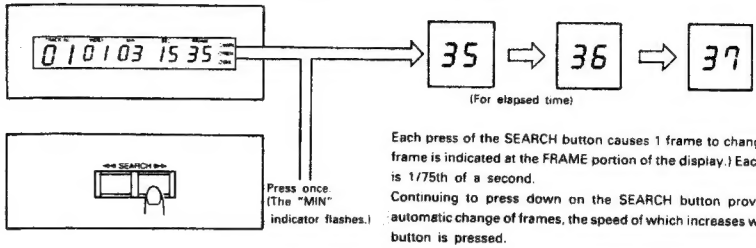

Each press of the SEARCH button causes 1 frame to change. (The frame is indicated at the FRAME portion of the display.) Each frame is 1/75th of a second.
Continuing to press down on the SEARCH button provides an automatic change of frames, the speed of which increases while the button is pressed.

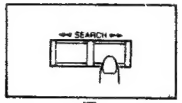

While monitoring the sound, press the SEARCH button until you come close to the desired position, in the track. Holding the SEARCH button down allows "course" searching.

One press at a time

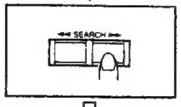

While monitoring the sound, press the SEARCH button a number of times to find the desired position.
This allows "fine" searching.

If you go past the desired position, return by pressing the ◀◀ button a few times to back up.

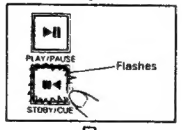

When the desired start position has been found, press the STDBY/CUE button.
The sound will mute and the light of the STDBY/CUE button will flash.
When the STDBY/CUE button stops flashing, playback is ready.

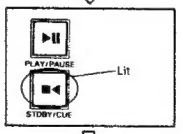

Pressing the PLAY/PAUSE button will start the play operation.
The PLAY/PAUSE button will light steadily.

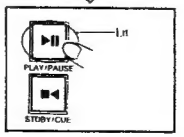

Figure 17

9) Checking the Play Start Position

After selecting the track or after changing the play start position with the SEARCH button, use the following procedure to repeatedly check the position at which play will start.

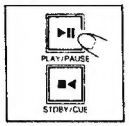

Press the PLAY/PAUSE button.
Check that play will start from the desired position.

> **NOTE:**
> Once you have set up a new start position within a track, do not press the PAUSE or SEARCH buttons. Pressing these buttons will change your start position.

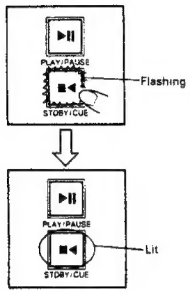

Press the STDBY/CUE button after checking the start position.
The player will return to the position where play was started.
When the STDBY/CUE button stops flashing, it is ready to start again.

If the play start position is not to your liking, use the search function to change the position.

Figure 18

10) End Monitor

The end section of a track can be played at the touch of a button.
This function comes in very handy to check how the track ends.

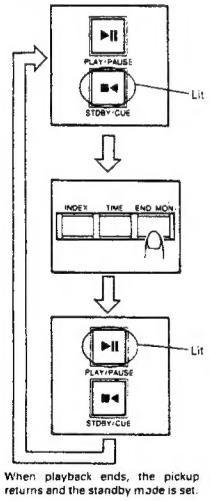

In the standby mode
The STDBY/CUE button is lit.

Press the END MON button.

The end of the track at which the standby mode is set is played.
Playing time: 0 to 35 seconds in 5-second steps can be presetting. (Refer to "Presetting" on page 6)

NORMAL END MONITOR

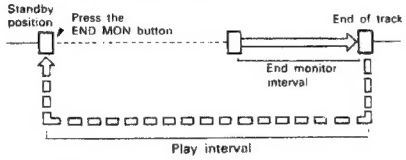

END MARK PLAY SETTING

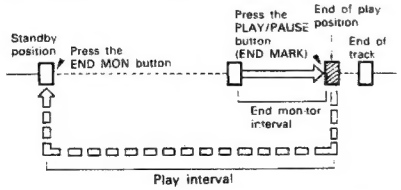

- Set preset switch d6-6 ("End Mark") to the on position.
- When the PLAY/PAUSE button is pressed during the end monitor interval, the end mark is memorized at that position and that position becomes the end of play position.
- The disc can now be played from the standby position to the end of play position.
  The time indication shows the time of this interval.

Figure 19

11) Selecting the Track to be Played Next During Playback

The next track to be played can be selected during playback by turning the SELECT knob when in the track selection mode.

During playback of track 1 (for example)

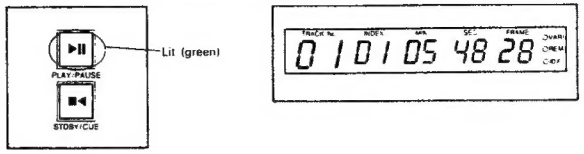

Check that the track selection mode is set (the IDX LED should be off).
Turn the SELECT knob.

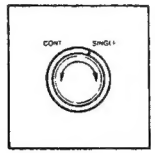

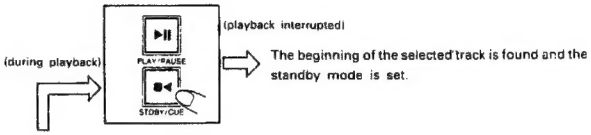

When the track 3 is selected.

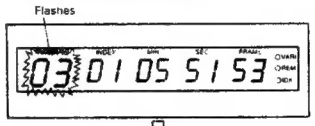

The number of the selected track is displayed on the "TRACK No." indicator.
* If the track currently playing is selected, the "TRACK No." indicator flashes rapidly to indicate that the selected track is the track which is currently playing.

(Playback of track 1 ends)

When the play mode is set to "SINGLE":

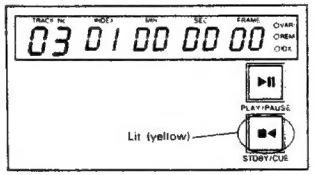

As soon as track 1 ends, the beginning of the track selected during playback is found and the standby mode is set.

When the play mode is set to "CONT.":

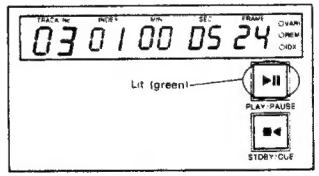

As soon as track 1 ends, playback of the track selected during playback begins.

Figure 20

12) Selecting the Index Number to be Played Next During Playback

The next index number to be played can be selected during playback by turning the SELECT knob when in the index number selection mode.

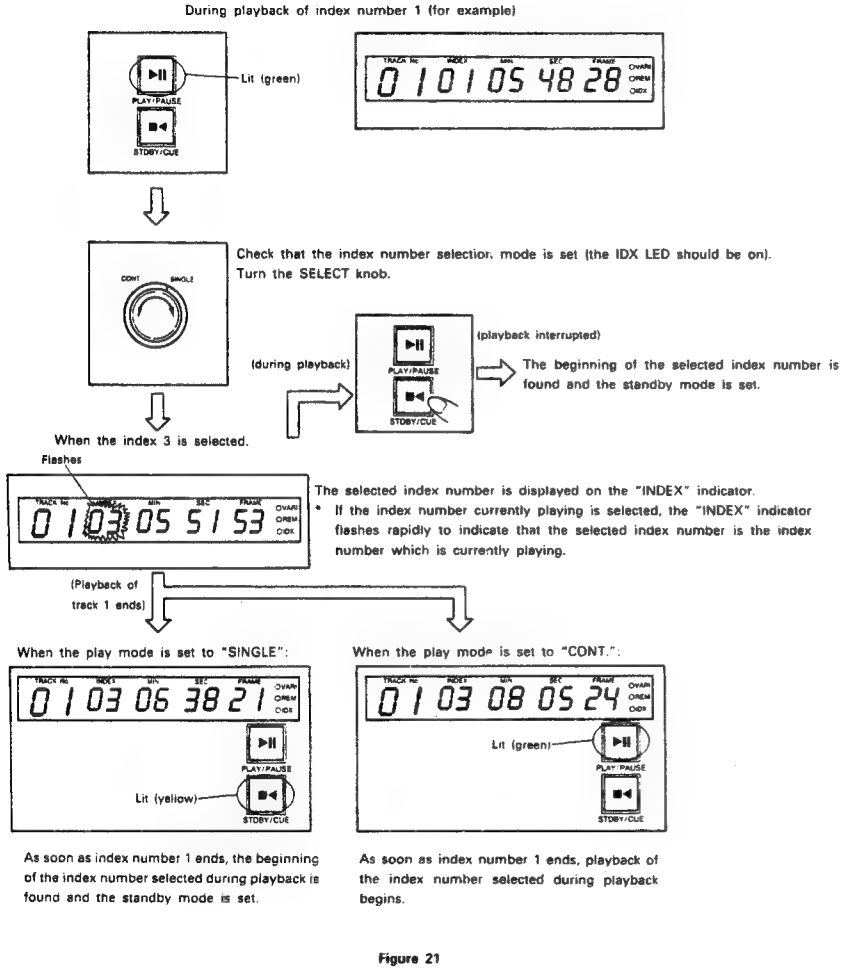

Figure 21

- The "INDEX" indicator flashes if the track does not contain the selected index number.

13) Ending Playback

The position of the pickup and the display when playback ends differ according to the play mode and the preset settings. The table below describes the status when playback ends.

(NOTE: This is only for when no other track or index number has been selected during playback.)

		NEXT TRACK STANDBY [d4-8] OFF	NEXT TRACK STANDBY [d4-8] ON
SINGLE MODE	[d2-5] RE CUE OFF	Playback start position — Track end position; Playback section (within one track). The PLAY/PAUSE button flashes (yellow), the time display turns off, and the pickup stops at the track end position.	Playback start position — Track end position; Playback section (within one track) — Next track start position. The standby mode is set at the next track.
	[d2-5] RE CUE ON	Playback start position — Track end position; Playback section (within one track). The pickup returns to the play start position and the standby mode is set.	
CONTINUE MODE	[d2-5] RE CUE OFF	Playback start position — Last track end position; Playback section. The PLAY/PAUSE button flashes (yellow), the time display turns off, and the pickup stops at the track end position.	Track one start position — Playback start position — Last track end position; Playback section. The pickup returns to track one and the standby mode is set.
	[d2-5] RE CUE ON	Playback start position — Last track end position; Playback section. The pickup returns to the play start position and the standby mode is set.	

Figure 22

14) Resetting the Microprocessor

The player's disc drive unit, control panel unit and display are controlled by microprocessor.

If for any reason the microprocessor should malfunction and the player should not operate, press the SELECT knob and STDBY/CUE button simultaneously.

The microprocessor is reset and the player is restored to the same conditions as when the power is turned on.

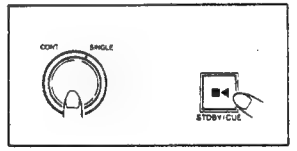

Figure 23

4 BAR CODE AUTO TRACK SELECT SYSTEM

1) This system is for performing the operations described below when a special bar code label is attached to the CD cartridge. (The bar code labels are sold separately.)

① Selecting a certain track automatically (EX and PR)

② Prohibiting selection/playback of a certain track (LO)

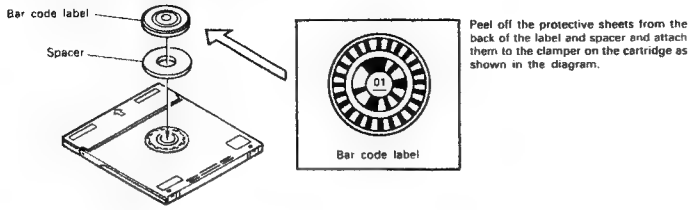

Figure 24

2) Selection modes and operations

EX
- When the cartridge is loaded, the standby mode is set at the track selected by the bar code label.
- Other tracks cannot be selected even by turning the SELECT knob.

PR
- When the cartridge is loaded, the standby mode is set at the track selected by the bar code label.
- If the SELECT knob is turned and another track is selected, the standby mode is set at that track.

LO
- When the cartridge is loaded, the standby mode is set at the first track on the disc.
- The SELECT knob can be turned to select other tracks, but the track prohibited by the bar code label cannot be selected.
- If the pickup is moved using the SEARCH buttons, the PLAY/PAUSE and STDBY/CUE buttons will not function at the track prohibited by the bar code label.

* To move the pickup to a position outside the track prohibited by the bar code label, either keep pressing one of the SEARCH buttons or select another track.

3) Selectable track number range:

Tracks 01 to 30 (same for the EX, PR and LO modes)

4) Types of bar code label sets (sold separately)

There are six types of sets, as follows:

Product number	Name	Description
SGK0038	BAR CODE-EX	EX, one label each for tracks 01 to 30 + 30 spacers
SGK0039	BAR CODE-PR	PR, one label each for tracks 01 to 30 + 30 spacers
SGK0040	BAR CODE-LO	LO, one label each for tracks 01 to 30 + 30 spacers
SGK0048	BAR EX-01-03	EX, ten labels each for tracks 01, 02 and 03 + 30 spacers
SGK0049	BAR EX-04-06	EX, ten labels each for tracks 04, 05 and 06 + 30 spacers
SGK0050	BAR EX-07-09	EX, ten labels each for tracks 07, 08 and 09 + 30 spacers

5 CLEANING THE OPTICAL PICKUP LENS

If the optical pickup lens is dirty, noise may enter the output signals and the sound may skip. Clean the optical pickup periodically, about once every 10 days.
The DENON AMC-9 Lens Cleaner is available for cleaning the lens.
Use the following procedure to clean the lens with the AMC-9 Lens Cleaner:

- When the "POWER" is off, insert the cleaner into the player unit, touch its knob, place your forefinger and move it from side to side several times.
- When the "POWER" is on, move the knob to the left and wait until the player's "TRACK No" display changes from "–" to "00" after inserting the cleaner, for approx. 30 secs, and move it from side to side several times.

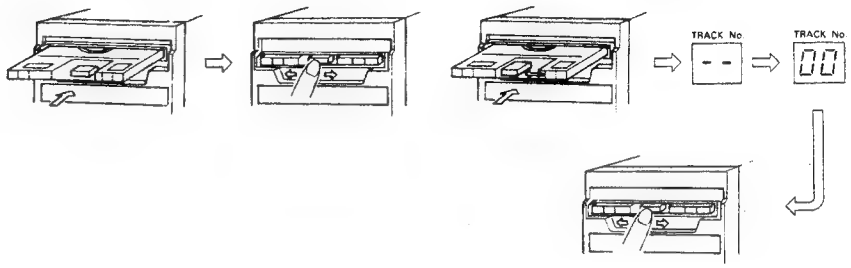

Figure 25

6 COMPACT DISCS

1. Precautions on handling compact discs
- Do not allow fingerprints, oil or dust to get on the surface of the disc.
  If the disc is dirty, wipe it off with a soft dry cloth.
  We recommend using DENON's AMC-20/21 CD CLEANER is recommended.
- Do not use benzene, thinner, water, record spray, electrostatic-proof chemicals, or silicone-treated cloths to clean discs.
- Always use carefully handle discs to prevent damaging the surface; in particular when removing a disc from its case or returning it.
- Do not bend.
- Do not apply heat.
- Do not enlarge the hole in the center of the disc.
- Do not write on the label (printed side) with a hard-tipped implement such as a pencil or ball point pen.
- Condensation will form if a disc is brought into a warm area from a colder one, such as outdoors in winter. Do not attempt to dry the disc with a hair dryer, etc.

2. Precaution on storage
- After playing a disc, always unload it from the player.
- Always store the disc in the cartridge to prevent from dirt or damage.
- Do not place discs in the following areas:
  1) Areas exposed to direct sunlight for a considerable time.
  2) Areas subject to accumulation of dust or high humidity.
  3) Areas affected by heat from indoor heaters, etc.

7 TROUBLESHOOTING

If the player does not seem to be functioning properly, check the following:

Error message lights when cartridge is loaded:
- Disc is not housed correctly in cartridge ..... See page 11
- Disc is dirty or scratched ..... See page 23
- Optical pick-up lens is dirty ..... See page 23

Player does not operate when front panel buttons are pressed.
- SWITCH INHIBIT switch is set to "ON" (INHIBIT) ..... See page 8
- Reset the microprocessor ..... See page 21

After play button is pressed, sound does not reproduce readily.
- Cue level detect switches are not set ..... See page 7

No sound is produced or sound is distorted.
- Output level control is set to MIN ..... See page 5
- Output cord is not properly connected to amplifier ..... See page 10
- Problem with adjustment or settings of amplifier switches.

DENON

CD PLAYER

DN-961FA

OPERATING INSTRUCTIONS

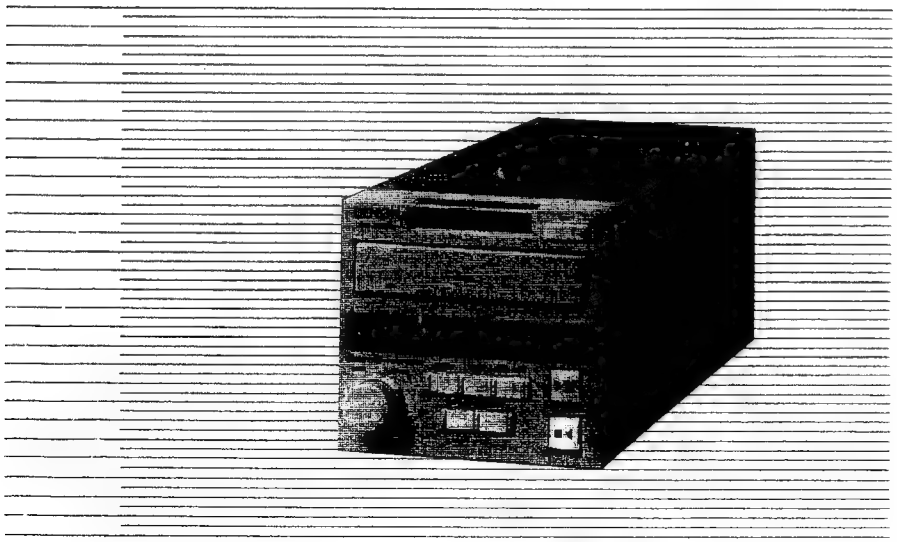

IMPORTANT TO SAFETY

WARNING:

TO PREVENT FIRE OR SHOCK HAZARD, DO NOT EXPOSE THIS APPLIANCE TO RAIN OR MOISTURE.

NOTE:
This CD player uses a semiconductor laser. To allow you to enjoy music with stable operation, we recommend to use it in a room whose temperature is between 5°C and 35°C.

Please check to make sure the following items, aside from the main unit, are packed in the carton.

(1) Operating instructions ..... 1 pc.
(2) 3P power supply cord ..... 1 pc.
(3) Spare fuse ..... 1 pc.

CAUTION:

1. **Handle the power supply cord carefully.**
   Do not damage or deform the power supply cord. If it is damaged or deformed, it may cause electric shock or malfunction when using. When disconnecting it from wall outlet, be sure to hold the plug attachment. Do not pull on the cord.
2. **Do not open the top cover.**
   In order to prevent electric shock, do not open the top cover. If problems occur, contact your DENON dealer.
3. **Do not place anything inside.**
   Do not place metal objects or spill liquid inside the CD player, as this may result in electric shocks or malfunction.

Please record and retain the model name and serial number of your set shown on the rating label.

Model No. DN-961FA Serial No. _____

TABLE OF CONTENTS

[1] GENERAL 3
Main Features 3
[2] DESCRIPTION OF THE FUNCTION 4
1) Names and Functions of the Parts 4, 5
2) Presettings ..... 6~10
3) Connections 10, 11
4) Loading and Ejecting the Disc 11
[3] BASIC OPERATION 12
1) Before Starting 12
2) Selecting the Play Mode 12
3) Selecting Tracks 12
4) Selecting the Index Number 13
5) Starting Playback 14
6) Stopping Playback 14
7) Description of the PLAY/PAUSE, and STDBY/CUE Operations 15
8) Moving the Play Start Position 16
9) Checking the Play Start Position 17
10) End Monitor 17
11) Selecting the Track to be Played Next During Playback 18
12) Selecting the Index Number to be Played Next During Playback 19
13) Ending Playback 20
14) Resetting the Microprocessor 20
[4] COMPACT DISCS 20
[5] TROUBLESHOOTING 21

[1] GENERAL

Main Features

The DN-961FA CD player is a table-top type CD player designed for use in broadcast stations, for production, etc.

1) A rotary pulse encoder is used for the selector which selects tracks and index numbers, making selection simple.
   When the selector is turned, the track or number display changes, the search operation starts immediately, and the pickup moves quickly to the play start position.
2) Playback signals are output immediately when the play mode is set.
   In addition, delay start can be preset.
3) The play time display can be switched between the remaining time and the elapsed time, depending on the purpose.
4) When the STDBY/CUE button is pressed during playback, the pickup moves to the position at which the play mode was last set and the standby mode is set, making it simple to check the track which is playing.
5) The last section of that track can be monitored by pressing the END MON (end monitor) button during the standby mode.
6) An E.O.M. (End of Message) signal can be emitted when near the end of playback to warn that playback is about to end.
7) The pickup can be moved to any position on the disc using the manual search operation.
8) The signals for the left and right channels can be mixed for mono output.
9) The playing speed can be varied within the range of 0 to +3%, by 0.2% step.
10) Discs recorded on the CD cart recorder (DN-7700R) and not including TOCs can be played.
11) The player can be controlled externally via both parallel and serial remote connectors.
12) The player can be connected to the fader switch on a mixing control console and fade-started.

2 DESCRIPTION OF THE FUNCTION

1) Names and Functions of the Parts

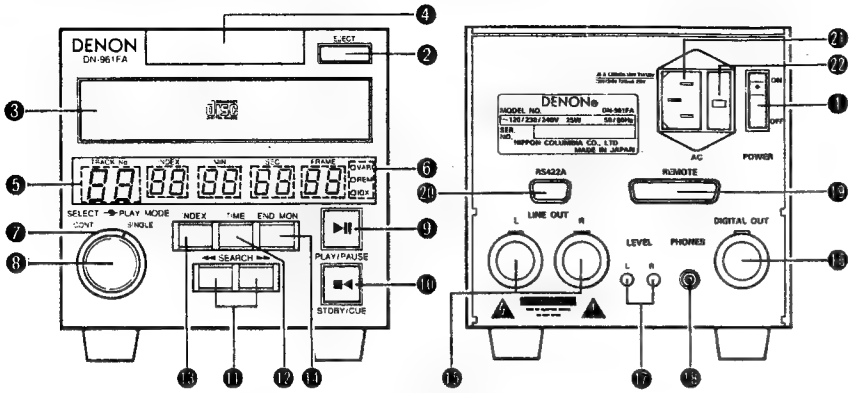

Figure 1

❶ POWER (Power Switch)
The power turns on when the POWER switch is set to the ON side, and turns off when the switch is set to the OFF side.

❷ EJECT (Eject Button)
Press this to open the disc holder.
The disc holder does not open if this button is pressed during the play mode.

❸ Disc Holder
This is where discs are loaded.

❹ Disc Window
The tray is visible, making it easy to check whether or not a disc is loaded and turning, etc.

❺ Display
The display window includes the "TRACK No.", "INDEX", "MIN", "SEC", and "FRAME" displays, and the "REM", "VARI", and "IDX" LEDs.

❻ "VARI", "REM" and "IDX" Indicators
VARI: This lights when the playing speed is set at anything other than standard. (Refer to presetting on Page 9).
REM: This lights when the remaining time is displayed.
IDX: This lights when in the index selection mode.

❼ PLAY MODE (Play Mode Switch)
This is for switching the play mode between the single track mode (SINGLE) and continuous play mode (CONT.).

❽ SELECT (Selector Knob)
This knob is used to select track and index numbers.

❾ PLAY/PAUSE (Play/Pause Button)
This button is pressed to start playback, or during playback to set the pause mode.

❿ STDBY/CUE (Standby/Cue Button)
When this button is pressed during playback, the pickup returns to the position at which playback started, the standby mode is set, and the button lights (yellow).

⓫ SEARCH (Search Buttons)
These buttons are used to change the position for starting playback.

⓬ TIME (Time Button)
This button is used to switch the time display between the elapsed time and remaining time.

⓭ INDEX (Index Button)
This button is used to switch between the track selection mode and index number selection mode.

⓮ END MON (End Monitor Button)
This button is pressed during the standby mode to play the last section of the track.
* For instructions on setting the playing time, refer to d5-5, 6 and 7 under "Presettings" on Page 9.

⓯ LINE OUT L/R (Output Connectors)
1) These are active balanced type outputs using XLR type connectors.
Connect them to balanced type inputs with an impedance of 600 ohms on an amplifier or console.
2) Signal layout
Pin 1 : Common
Pin 2 : Cold
Pin 3 : Hot
3) Applicable connector: Cannon XLR-3-11C or the equivalent
NOTE: Do not short-circuit the hot or cold pin with the common pin.

⓰ DIGITAL OUT (Digital Output Connector)
1) This is an active balanced type output using an XLR type connector.
Connect it to the balanced type digital input on an amplifier or console.
2) Signal layout
Pin 1 : Common
Pin 2 : Cold
Pin 3 : Hot
3) Applicable connector: Cannon XLR-3-11C or the equivalent
NOTE: When using the digital output, set preset item d3-8 to "1".

⓱ LEVEL L/R (Output Level Controls)
These adjust the level of the audio signals output from the LINE OUT L/R ● connectors.

⓲ PHONES (Headphones Jack)
Connect headphones with an impedance of 30 to 40 ohms.

⓳ REMOTE (Remote Control Connector)
1) This is a connector for parallel remote connection. The player can be controlled remotely with a dry contact circuit connection.
2) Applicable connector: 25-pin D-sub plug
3) Signal layout

Pin No.		Signal	I/O	Level
1		FG	–	
	14	PLAY TALLY	O	TTL (Iol=48 mA)
2		PLAY COMMAND	I	HCMOS (Ii=–3 mA)
	15	PAUSE TALLY	O	TTL (Iol=48 mA)
3		PAUSE COMMAND	I	HCMOS (Ii=–3 mA)
	16	STDBY/CUE TALLY	O	TTL (Iol=48 mA)
4		STDBY/CUE COMMAND	I	HCMOS (Ii=–3 mA)
	17	INDEX 2/3 TALLY	O	TTL (Iol=48 mA)
5		TRACK (+) COMMAND	I	HCMOS (Ii=–3 mA)
	18	NC	–	
6		TRACK (–) COMMAND	I	HCMOS (Ii=–3 mA)
	19	NC	–	
7		SEARCH (FWD) COMMAND	I	HCMOS (Ii=–3 mA)
	20	NC	–	
8		SEARCH (REV) COMMAND	I	HCMOS (Ii=–3 mA)
	21	NC	–	
9		FADER START	I	PHOTO COUPLER (Ii=–10 mA)
	22	TALLY POWER SUPPLY	O	+5 V, 20 mA
10		COMMAND COMMON	–	
	23	COMMAND COMMON	–	
11		NC	–	
	24	E.O.M./INDEX 2/INDEX 3	O	DRY CONTACT
12		NC	–	
	25	E.O.M./INDEX 2/INDEX 3	O	DRY CONTACT
13		NC	–	

⓴ RS422A (Remote Control Connector)
1) This is a connector for serial remote connection. The player can be connected to and controlled from a personal computer or other external controller.
2) Applicable connector: 9-pin D-sub plug
3) Baud rate: 9600bps
4) Signal layout

Pin No.		Signal	I/O	Level
1		F.GROUND	–	
	6	S.GROUND	–	
2		TxD (RETURN)	O	RS422A
	7	TxD	O	RS422A
3		RxD	I	RS422A
	8	RxD (RETURN)	I	RS422A
4		NC	–	
	9	NC	–	
5		NC	–	

㉑ AC (AC Inlet)
Insert the included power cord here.

㉒ Fuse Holder
- To replace the fuse, use small screwdrivers, etc., to push the catches (A) and (B) at the top and bottom of the holder inward and remove the fuse holder outward.
- Replace the old fuse with one with the rating indicated on the panel.
Type of fuse: T1.00 A 125 V for 120 V operation
T315 mA 250 V for 230/240 V operation

● PRESET VOLTAGE CHANGE
DN-961FA allows selection of either 120 V, 230 V or 240 V operation. The unit has been preset at 240 V prior to shipment except for U.S.A. & Canada. In order to use the unit at 120 V or 230 V, follow the procedures below.
1. The fuse holder serves as a voltage selector.
2. Turn the voltage selector block so that the proper voltage setting (120 or 230) appears in the indication window and refit it.
Be sure to replace a fuse described in the above when operate the unit with 120 V.
3. Press in the fuse holder back to the main body. Make sure of the click action of the fixing tabs for secure fitting.

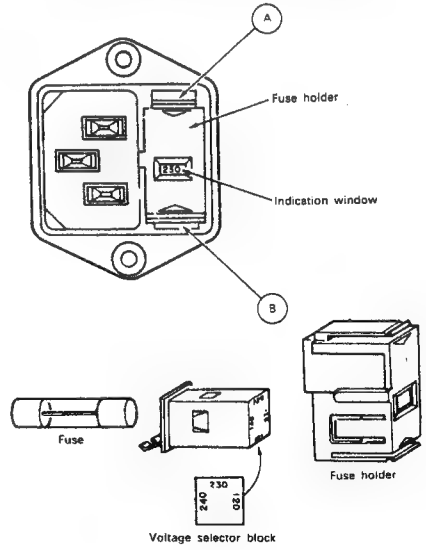

Figure 2

2) Presettings

• Setting procedure

①

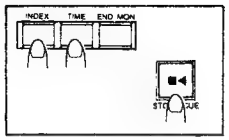

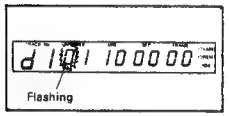

• **The presettings can only set when the disc holder is open or when disc is loaded and in the standby mode.**
Press the STDBY/CUE button once while holding in the INDEX and TIME buttons. The "d1" preset mode (for example d 1 01 10 00 00) appears on the display, and the settings can now be changed.
(The LED flashes where you can change modes.)

* To change the setting from "d1" to "d2", "d3", etc., press the STDBY/CUE button the number of times necessary while holding in the INDEX and TIME buttons.
d1 → d2 → d3 → d4 → d5 → d6 → d7
End of preset setting mode

②

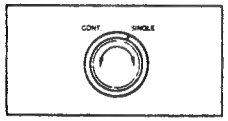

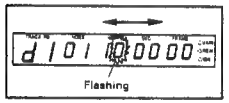

• Turn the SELECT knob to change the position which is flashing.
The flashing position moves to the right when the knob is turned clockwise, and to the left when the knob is turned counterclockwise.

③

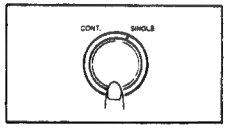

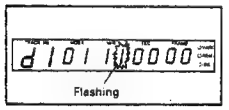

• Press the SELECT knob to change the "0" or "1" setting.
The INDEX × 10 indicator on the display window changes from "0" to "1".
Press the knob again to change the setting back from "1" to "0".

* [1] indicates the setting is turned on.
[0] indicates the setting is turned off.
Set to on or off as necessary for that function.

Figure 3

To turn off the preset setting mode:
Repeat step ① above, press the STDBY/CUE button until "d7" is displayed, then press it once again. The new preset setting mode is memorized. The display reads as it was before the settings were started.

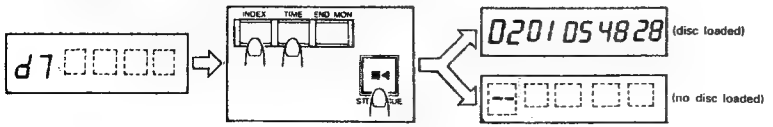

Figure 4

• **Table of preset functions (Note:** [0] and [1] indicate settings upon shipment from the factory.)

TRACK No.		INDEX		MIN		SEC		FRAME	
		Bit 1	Bit 2	Bit 3	Bit 4	Bit 5	Bit 6	Bit 7	Bit 8
		[0]	[1]	[1]	[0]	[0]	[0]	[0]	[0]
d	1	MONO	CUE DETECT LEVEL			FADE IN DURATION			–
		[1]	[1]	[0]	[1]	[0]	[0]	[1]	[0]
d	2	FRAME DISP.	INI-DISP.	–	END DETECT	RE CUE	PLAY LOCK	FLASH	–
		[0]	[0]	[0]	[1]	[0]	[0]	[0]	[0]
d	3	REMOTE INHIB	SWITCH INHIB	END OF MESSAGE			–	–	DIGITAL OUT
		[0]	[0]	[1]	[0]	[0]	[0]	[0]	[0]
d	4	TEST	VARI ENABLE	–	–	DERAY START		CDR DISC	NEXT TRACK
		[0]	[1]	[0]	[1]	[0]	[1]	[0]	[0]
d	5	INDEX INHIB	INDEX 3/2	EOM /INDEX	FADER MODE	END MONITOR			INDEX 2
		[0]	[1]	[0]	[1]	[1]	[0]	[0]	[0]
d	6	VARIABLE SPEED				SKIP TRACK	END MARK	–	–
		[0]	[0]	[0]	[0]	[0]	[0]	[0]	[0]
d	7	PLAYER ID				–	–	–	–

• **Description of preset functions**
(off = 0, on = 1. The "*" mark indicates settings upon shipment from the factory.)

[d1-1] MONO
* [0]: L/R stereo signals output.
[1]: L/R signals output mixed.

[d1-2, 3 and 4] CUE DETECT LEVEL:

	[d1-2]	[d1-3]	[d1-4]	Detection level
	0	0	0	–∞
	1	0	0	–72 dB
	0	1	0	–66 dB
*	1	1	0	–60 dB
	0	0	1	–54 dB
	1	0	1	–48 dB
	0	1	1	–42 dB
	1	1	1	–36 dB

[d1-5, 6 and 7] FADE IN DURATION:

	[d1-5]	[d1-6]	[d1-7]	Fade in time
*	0	0	0	0
	1	0	0	10 msec
	0	1	0	30 msec
	1	1	0	53 msec
	0	0	1	106 msec
	1	0	1	148 msec
	0	1	1	185 msec
	1	1	1	247 msec

[d2-1] FRAME DISPLAY
[0]: Frame not displayed during playback.
* [1]: Frame displayed during playback.

[d2-2] INITIAL DISPLAY
[0]: Elapsed time displayed when power turned on.
* [1]: Remaining time displayed when power turned on.

[d2-4] END DETECT
[0]: Track ends not detected during search operation.
* [1]: Track ends detected during search operation.

[d2-5] RE CUE
* [0]: Stop mode set when playback ends.
[1]: When playback ends, pickup returns to starting position and standby mode set.

[d2-6] PLAY LOCK
* [0]: Buttons other than the ones below also function during playback.
[1]: Buttons other than the PLAY MODE, TIME, PLAY/PAUSE and RESET buttons do not function during playback.

[d2-7] FLASH
[0]: PLAY indicator remains turned off (without flashing) during EOM operation, PAUSE indicator remains turned off when playback ends, and STDBY/CUE indicator remains turned off during search operation.
* [1]: PLAY indicator flashes during EOM operation, PAUSE indicator flashes when playback ends, and STDBY/CUE indicator flashes during search operation.

[d3-1] REMOTE INHIBIT
* [0]: "REMOTE" command accepted.
[1]: "REMOTE" command not accepted.

[d3-2] SWITCH INHIBIT
* [0]: No front panel buttons other than PLAY MODE, TIME and RESET buttons function.
[1]: All buttons function.

[d3-3, 4 and 5] E.O.M.: (PLAY/PAUSE button flashes green)

	[d3-3]	[d3-4]	[d3-5]	E.O.M. time setting
	0	0	0	E.O.M. not output
	1	0	0	5 sec
*	0	1	0	10 sec
	1	1	0	15 sec
	0	0	1	20 sec
	1	0	1	25 sec
	0	1	1	30 sec
	1	1	1	35 sec

[d3-8] DIGITAL OUT
* [0]: Standard playback mode.
Only audio data output from digital output.
[1] Digital output priority mode.
Audio data and subcodes output from digital output.
DSP functions (FADE IN, MONO) inhibited.

[d4-1] TEST
* [0]: Standard playback mode. (Always leave this at [0], The player cannot be used if set to [1].)

[d4-2] VARIABLE SPEED ENABLE
* [0]: Discs played at standard speed.
[1]: Discs played at speed set by variable speed presetting [d6-1, 2, 3 and 4].

[d4-5, 6] DELAY START:

	[d4-5]	[d4-6]	Delay start time setting
*	0	0	0 msec
	1	0	100 msec
	0	1	200 msec
	1	1	300 msec

[d4-7] CDR DISC
* [0]: Mode for playing normal discs including TOCs. (Discs without TOCs cannot be played.)
[1]: Discs recorded on a CD recorder (DN-7700R, etc.) without TOCs can be played.

[d4-8] NEXT TRACK STANDBY
* [0]: When playback ends, next operation performed according to "RE CUE" setting.
[1]: When playback ends, standby mode set at next track. ("RE CUE" setting ignored.)

[d5-1] INDEX INHIBIT
* [0]: Index numbers can be selected.
[1]: Index numbers cannot be selected.

[d5-2] INDEX 3/2
[0]: "INDEX 2 TALLY" output from REMOTE connector pins 24 and 25. (Not valid when [d5-3] set to [1].)
* [1]: "INDEX 3 TALLY" output from REMOTE connector pins 24 and 25. (Not valid when [d5-3] set to [1].)

[d5-3] EOM/INDEX
* [0]: "INDEX TALLY" (set by INDEX 3/2 [d5-2]) output from REMOTE connector pins 24 and 25.
[1]: "EOM TALLY" output from REMOTE connector pins 24 and 25.

[d5-4] FADER START MODE SELECT
[0]: Player starts when fader switch turned on.
* [1]: Player starts when fader switch turned on, set to pause mode when fader switch turned off.

[d5-5, 6 and 7] END MONITOR:

	[d5-5]	[d5-6]	[d5-7]	End monitor time setting
	0	0	0	End monitor off.
	1	0	0	5 sec
*	0	1	0	10 sec
	1	1	0	15 sec
	0	0	1	20 sec
	1	0	1	25 sec
	0	1	1	30 sec
	1	1	1	35 sec

[d5-8] INDEX 2
* [0]: "INDEX 3 TALLY" output from REMOTE connector pin 17.
[1]: "INDEX 2 TALLY" output from REMOTE connector pin 17.

[d6-1, 2, 3 and 4] VARIABLE SPEED: This sets the playing speed within a range of 0 to 3% when [d4-2] is set to [1].

	[d6-1]	[d6-2]	[d6-3]	[d6-4]	Playback speed
	0	0	0	0	0.0% (Standard speed)
	1	0	0	0	+0.2%
	0	1	0	0	+0.4%
	1	1	0	0	+0.6%
	0	0	1	0	+0.8%
	1	0	1	0	+1.0%
	0	1	1	0	+1.2%
	1	1	1	0	+1.4%
	0	0	0	1	+1.6%
	1	0	0	1	+1.8%
*	0	1	0	1	+2.0%
	1	1	0	1	+2.2%
	0	0	1	1	+2.4%
	1	0	1	1	+2.6%
	0	1	1	1	+2.8%
	1	1	1	1	+3.0%

[d6-5] SKIP TRACK
[0]: Skip track playback as set in the TOC is possible when playing CDR discs.
* [1]: Skip track playback as set in the TOC is not possible when playing CDR discs.

[d6-6] END MARK
* [0]: The track end position does not change even if the PLAY/PAUSE button is pressed during the end monitor mode.
[1]: The position at which the PLAY/PAUSE button is pressed during the end monitor function becomes the track end position.

[d7] PLAYER ID: Set to 4-bit (binary) to control the player with commands including IDs from the RS-422A connector.
* When several units are connected via the RS-422A connector, separate IDs must be set for each of them.

	[d7-1]	[d7-2]	[d7-3]	[d7-4]	ID
*	0	0	0	0	0
	1	0	0	0	1
	0	1	0	0	2
	1	1	0	0	3
	0	0	1	0	4
	1	0	1	0	5
	0	1	1	0	6
	1	1	1	0	7
	0	0	0	1	8
	1	0	0	1	9
	0	1	0	1	10
	1	1	0	1	11
	0	0	1	1	12
	1	0	1	1	13
	0	1	1	1	14
	1	1	1	1	15

- **Resetting to the default settings**
  Turn the POWER switch on while holding in the INDEX and TIME buttons.
  All values are reset to the values indicated on the "Table of preset functions".

3) Connections

3)-1 Output signal connections

① Analog output signal connections
Connect the player's output connectors (LINE OUT L and R) ● to the balanced inputs on an amplifier or console using 3-pin cords.

② Digital output signal connections
To use the digital output, connect the player's output connector (DIGITAL OUT) ● to the balanced digital input on an amplifier or console using a 3-pin cord.

NOTES:
1) When using the digital output, set preset item d3-8 to "on".
2) To send the digital output to an unbalanced circuit, do so via a balanced/unbalanced conversion circuit.

Balanced/unbalanced conversion circuit

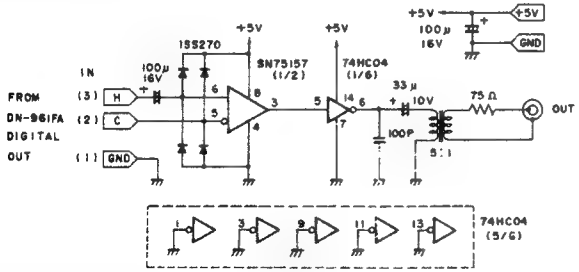

Figure 5

3)-2 Remote signal connections

① Parallel remote signal connections
To use the player remotely, connect the remote connector (REMOTE) ● with the remote control circuit using a 25-pin D-sub cord.

NOTE: When using parallel remote connections, set preset item d3-1 to "off".

② Serial remote signal connections
To use the player connected to a controller or personal computer, connect the remote connector (RS422A) ● to the controller using a 9-pin D-sub cord.

3)-3 Power supply connections

Connect the player to a power supply with the preset voltage (as shown on the fuse holder window) using the included power cord. Make sure the POWER switch is turned off when doing so.

3)-4 Remote control connections

To control the DN-961FA remotely, refer to the example of remote control connections given below.

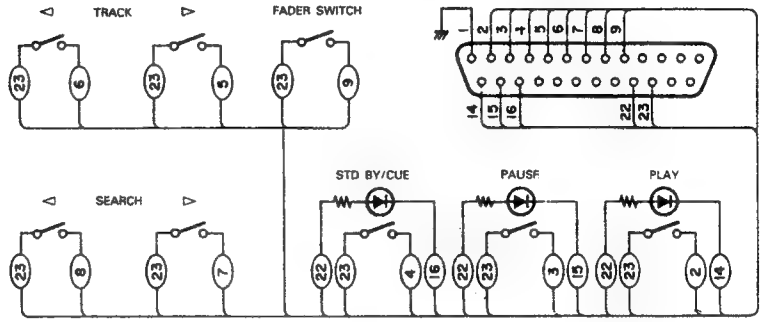

Figure 6

4) Loading and Ejecting the Disc

- If the disc holder is closed, press the EJECT button to open it.

- Place the disc in the disc holder.
  NOTES:
  - Make sure the disc holder is fully open when loading discs.
  - Place the disc securely in the tray guide at the center of the disc holder.

- Press the disc holder in by hand to close it.
  The disc is loaded and automatically starts turning, the STDBY/CUE button flashes, and search the beginning of the first track or selected track on the disc.

- When the search operation is completed, the time is displayed and the STDBY/CUE button stops flashing, remaining lit.

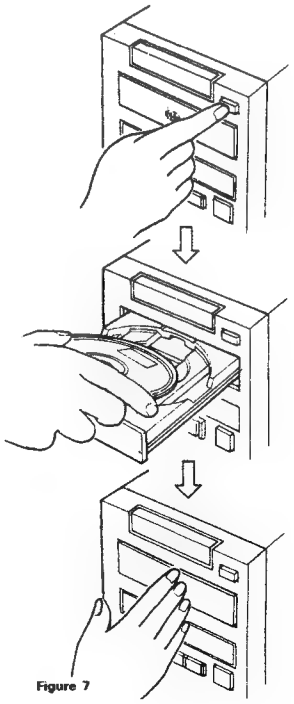

Figure 7

3 BASIC OPERATION

1) Before Starting

① Turn the power on.
② Load a disc.
③ Set the presettings according to the purpose. (Refer to "Presettings" on Page 6.)
* Steps ② and ③ above can be performed in reverse order.

2) Selecting the Play Mode

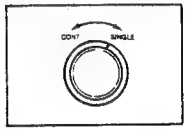

• Set the PLAY MODE selector to SINGLE or CONT.

3) Selecting Tracks

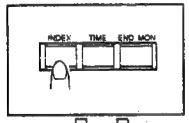

• Set the track selection mode. (The IDX LED should be off.)
If the IDX LED is on, press the INDEX button to turn it off.

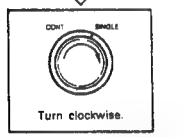

The track number changes as follows (for a disc containing four tracks):
→ 01 → 02 → 03 → 04 ——

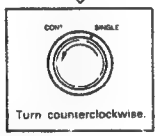

The track number changes as follows (for a disc containing four tracks):
—— 01 ← 02 ← 03 ← 04 ←

* If the SELECT knob is pressed in and turned, the track number increases or decreases by 10 tracks per step.

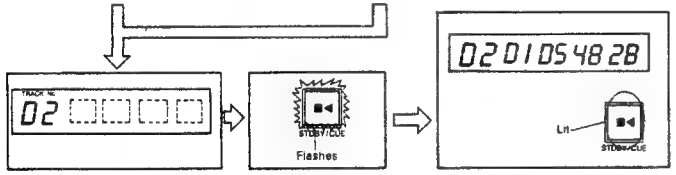

• When a track is selected, that track number is displayed. (In this case track 2 is selected.)

• The STDBY/CUE indicator flashes during the search operation.

When the search operation is completed, the time is displayed and the STDBY/CUE indicator stops flashing, remaining lit.

Figure 8

• If the selected track does not exist on the disc, the TRACK No. display flashes. Check the track numbers.

4) Selecting the Index Number

There is no need to select index numbers when starting from the beginning of a track.

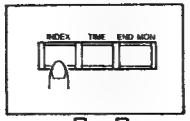

• Set the index selection mode. (The IDX LED should be on.)
If the IDX LED is off, press the INDEX button to turn it on.

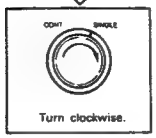

The index number changes as follows (for a track containing four index numbers):
→ 01 → 02 → 03 → 04 ——

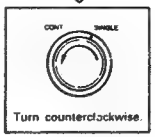

The index number changes as follows (for a track containing four index numbers):
—— 01 ← 02 ← 03 ← 04 ←

* If the SELECT knob is pressed in and turned, the index number increases or decreases by 10 index per step.

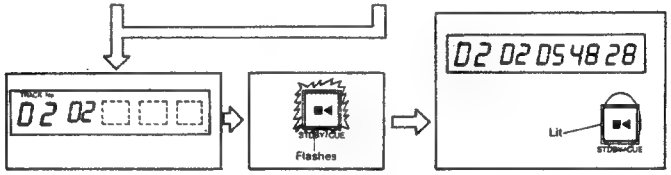

• When an index number is selected, that index number is displayed. (In this case index number 2 is selected.)

• The STDBY/CUE indicator flashes during the search operation.

When the search operation is completed, the time is displayed and the STDBY/CUE indicator stops flashing, remaining lit.

Figure 9

• If the selected index number does not exist on that track, the INDEX display flashes. Check the index numbers.
• Select the index number after selecting the track. If a track is selected after an index number, that index number is cleared.

5) Starting Playback

Playback starts when the PLAY/PAUSE button is pressed during the pause or standby.
(Playback starts with no time delay, so songs can be switched smoothly.)

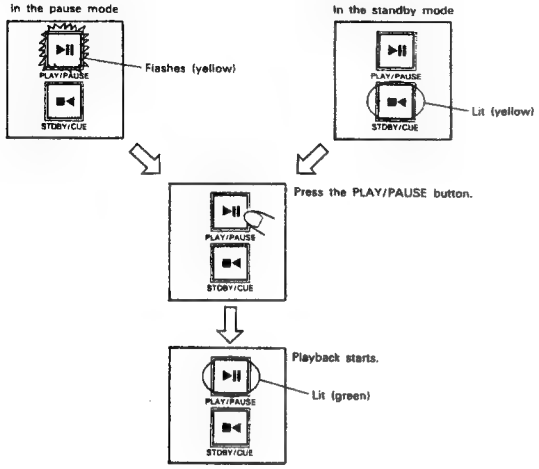

Figure 10

6) Stopping Playback

Playback can be stopped in the middle of a track either by pausing or by back-cuing.

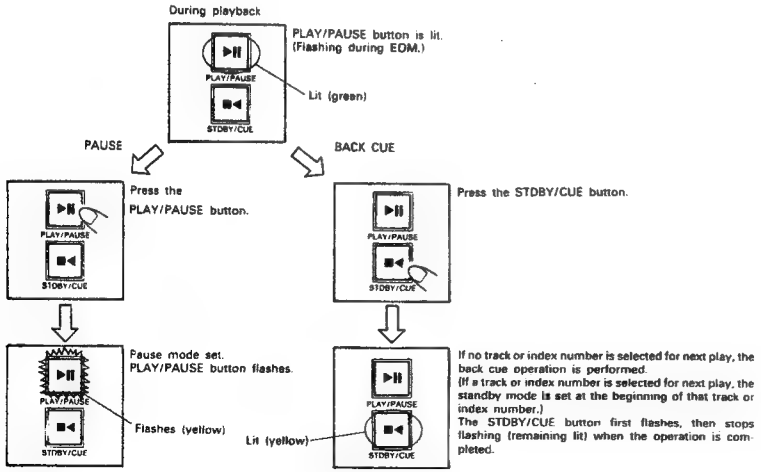

Figure 11

7) Description of the PLAY/PAUSE, and STDBY/CUE Operations

- Each press of the PLAY/PAUSE button causes the operation to change from play to pause or from pause back to play.
- The play operation of this CD player is performed via DSP (Digital Signal Processor) and memory, so the audio starts instantly after the PLAY/PAUSE button is pressed.
- Pressing the STDBY/CUE button during disc play resets the CD to the position at which play was started. (This is called the back cue function.)

The steps through which disc play is performed when the PLAY/PAUSE and STDBY/CUE buttons are pressed are described with the aid of the following illustrations in Figures 12 through 14.

PLAY and PAUSE

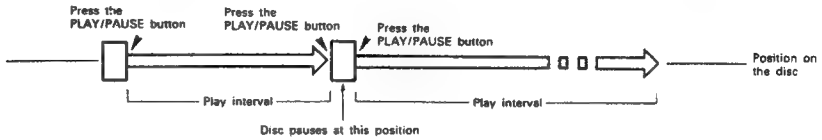

Figure 12

Pressing the PLAY/PAUSE button starts the disc play, the advancement of which is illustrated by the arrows of Figure 14. Pressing the PLAY/PAUSE button again during disc play causes the play operation to pause, and pressing this button once more causes the disc to be played again.

PLAY and CUE

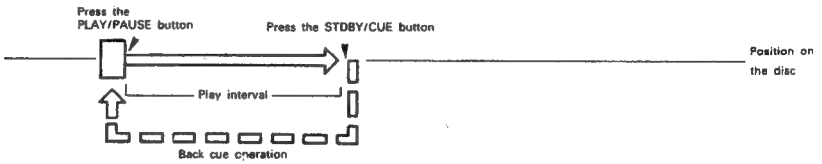

Figure 13

Pressing the PLAY/PAUSE button starts the disc. Pressing the STDBY/CUE button will reset the disc to the position where play was started. By alternately pressing the PLAY/PAUSE button and the STDBY/CUE button, the disc may be played from the same position any number of times. This function is called back cue.

PLAY, PAUSE, and CUE

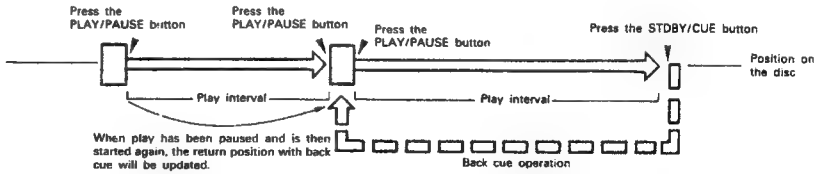

Figure 14

8) Moving the Play Start Position

When a track is selected and the PLAY/PAUSE button is pressed, playback begins from the beginning of that track. To start from a different position, use the following procedure to find the desired position.

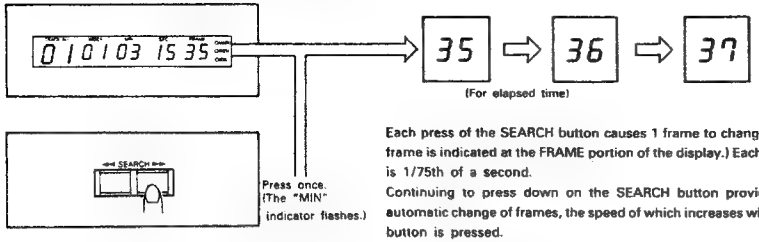

Each press of the SEARCH button causes 1 frame to change. (The frame is indicated at the FRAME portion of the display.) Each frame is 1/75th of a second.
Continuing to press down on the SEARCH button provides an automatic change of frames, the speed of which increases while the button is pressed.

While monitoring the sound, press the SEARCH button until you come close to the desired position, in the track. Holding the SEARCH button down allows "course" searching.

One press at a time

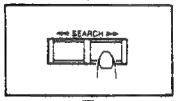

While monitoring the sound, press the SEARCH button a number of times to find the desired position.
This allows "fine" searching.

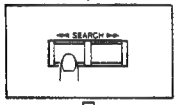

If you go past the desired position, return by pressing the ◀◀ button a few times to back up.

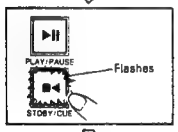

When the desired start position has been found, press the STDBY/CUE button.
The sound will mute and the light of the STDBY/CUE button will flash.
When the STDBY/CUE button stops flashing, playback is ready.

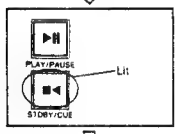

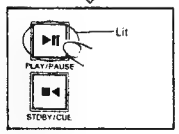

Pressing the PLAY/PAUSE button will start the play operation.
The PLAY/PAUSE button will light steadily.

Figure 15

9) Checking the Play Start Position

After selecting the track or after changing the play start position with the SEARCH button, use the following procedure to repeatedly check the position at which play will start.

Press the PLAY/PAUSE button.
Check that play will start from the desired position.

> **NOTE:**
> Once you have set up a new start position within a track, do not press the PAUSE or SEARCH buttons. Pressing these buttons will change your start position.

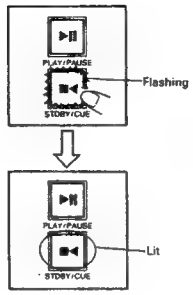

Press the STDBY/CUE button after checking the start position.
The player will return to the position where play was started.
When the STDBY/CUE button stops flashing, it is ready to start again.

If the play start position is not to your liking, use the search function to change the position.

Figure 16

10) End Monitor

The end section of a track can be played at the touch of a button.
This function comes in very handy to check how the track ends.

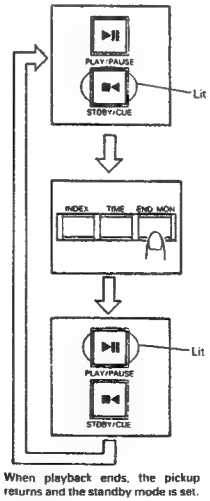

In the standby mode
The STDBY/CUE button is lit.

Press the END MON button.

The end of the track at which the standby mode is set is played.
Playing time: 0 to 35 seconds in 5-second steps can be presetting. (Refer to "Presetting" on page 6)

NORMAL END MONITOR

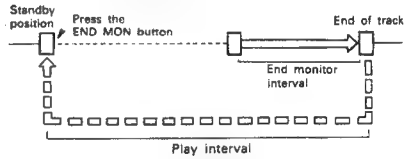

END MARK PLAY SETTING

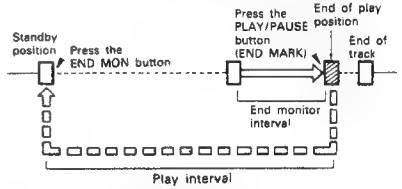

- Set preset switch d6-6 ("End Mark") to the on position.
- When the PLAY/PAUSE button is pressed during the end monitor interval, the end mark is memorized at that position and that position becomes the end of play position.
- The disc can now be played from the standby position to the end of play position.
  The time indication shows the time of this interval.

Figure 17

11) Selecting the Track to be Played Next During Playback

The next track to be played can be selected during playback by turning the SELECT knob when in the track selection mode.

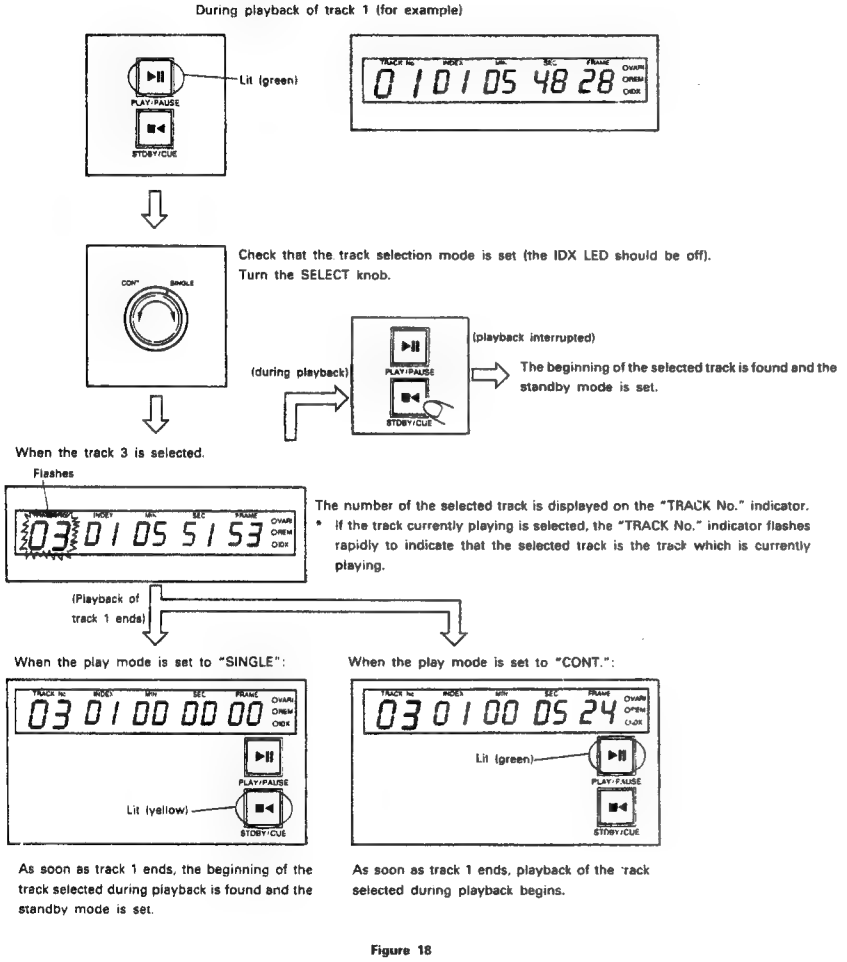

Figure 18

12) Selecting the Index Number to be Played Next During Playback

The next index number to be played can be selected during playback by turning the SELECT knob when in the index number selection mode.

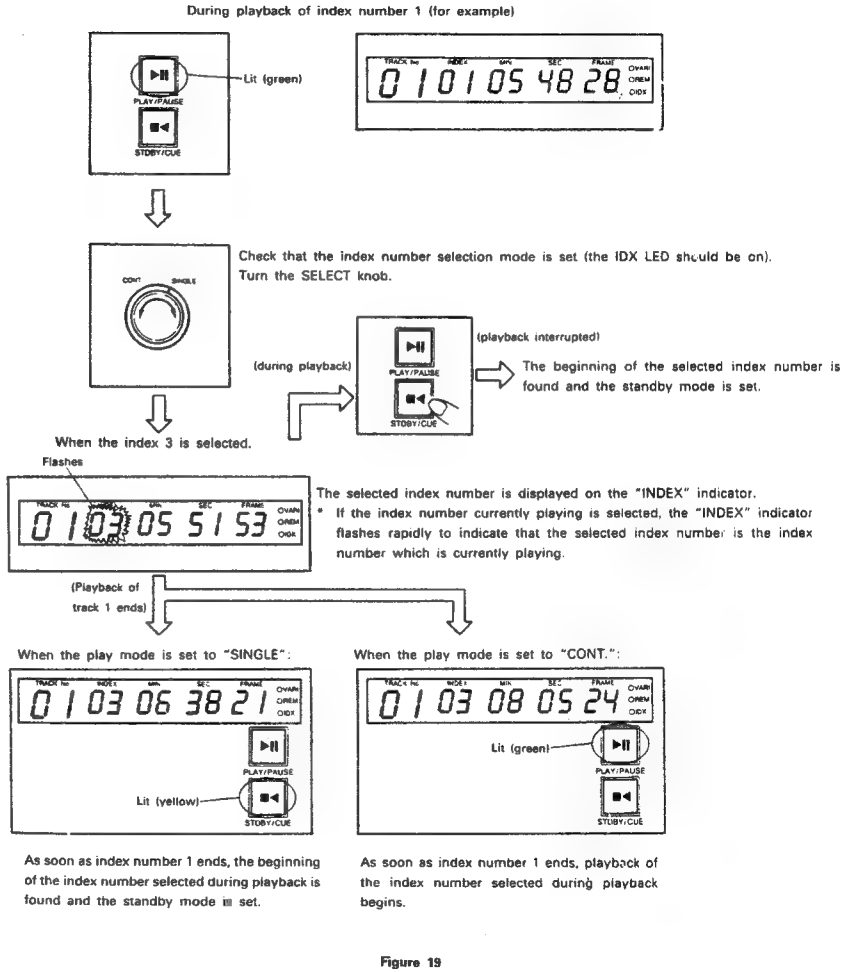

Figure 19

* The "INDEX" indicator flashes if the track does not contain the selected index number.

13) Ending Playback

The position of the pickup and the display when playback ends differ according to the play mode and the preset settings.

The table below describes the status when playback ends.
(NOTE: This is only for when no other track or index number has been selected during playback.)

		NEXT TRACK STANDBY [d4-8] OFF	NEXT TRACK STANDBY [d4-8] ON
SINGLE MODE	[d2-5] RE CUE OFF	Playback start position — Track end position; Playback section (within one track). The PLAY/PAUSE button flashes (yellow), the time display turns off, and the pickup stops at the track end position.	Playback start position — Track end position; Playback section (within one track) — Next track start position. The standby mode is set at the next track.
	[d2-5] RE CUE ON	Playback start position — Track end position; Playback section (within one track). The pickup returns to the play start position and the standby mode is set.	
CONTINUE MODE	[d2-5] RE CUE OFF	Playback start position — Last track end position; Playback section. The PLAY/PAUSE button flashes (yellow), the time display turns off, and the pickup stops at the track end position.	Track one start position — Playback start position — Last track end position; Playback section. The pickup returns to track one and the standby mode is set.
	[d2-5] RE CUE ON	Playback start position — Last track end position; Playback section. The pickup returns to the play start position and the standby mode is set.	

Figure 20

14) Resetting the Microprocessor

The player's disc drive unit, control panel unit and display are controlled by microprocessor.

If for any reason the microprocessor should malfunction and the player should not operate, press the SELECT knob and STDBY/CUE button simultaneously.

The microprocessor is reset and the player is restored to the same conditions as when the power is turned on.

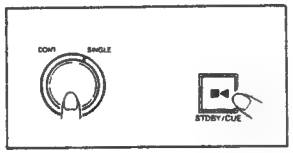

Figure 21

4 COMPACT DISCS

1. **Precautions on handling compact discs**
   - Do not allow fingerprints, oil or dust to get on the surface of the disc.
     If the disc is dirty, wipe it off with a soft dry cloth.
     We recommend using DENON's AMC-20/21 CD CLEANER is recommended.
   - Do not use benzene, thinner, water, record spray, electrostatic-proof chemicals, or silicone-treated cloths to clean discs.
   - Always use carefully handle discs to prevent damaging the surface; in particular when removing a disc from its case or returning it.
   - Do not bend.
   - Do not apply heat.
   - Do not enlarge the hole in the center of the disc.
   - Do not write on the label (printed side) with a hard-tipped implement such as a pencil or ball point pen.
   - Condensation will form if a disc is brought into a warm area from a colder one, such as outdoors in winter. Do not attempt to dry the disc with a hair dryer, etc.
2. **Precaution on storage**
   - After playing a disc, always unload it from the player.
   - Always store the disc in the cartridge to prevent from dirt or damage.
   - Do not place discs in the following areas:
     1) Areas exposed to direct sunlight for a considerable time.
     2) Areas subject to accumulation of dust or high humidity.
     3) Areas affected by heat from indoor heaters, etc.

5 TROUBLESHOOTING

If the player does not seem to be functioning properly, check the following:

Error message lights when disc is loaded:
- Disc is dirty or scratched ..... See page 20

Player does not operate when front panel buttons are pressed.
- SWITCH INHIBIT switch is set to "ON" (INHIBIT) ..... See page 8
- Reset the microprocessor ..... See page 20

After play button is pressed, sound does not reproduce readily.
- Cue level detect switches are not set ..... See page 7

No sound is produced or sound is distorted.
- Output level control is set to MIN ..... See page 5
- Output cord is not properly connected to amplifier ..... See page 10
- Problem with adjustment or settings of amplifier switches.

SPECIFICATIONS

Type:	Table-top CD Cart player (DN-951FA)/ Table-top CD player (DN-961FA)
Audio channels:	2 channels (stereo/mono selectable)
Usable discs:	Philips type compact discs
	8cm-disc compatible (using special adaptor)
Quantization:	16 bits, linear
Sampling frequency:	44.1 kHz
Line output:	Active balanced output
Output level:	+18 dBm (1 kHz, maximum level playback)
Output level variation range:	+18 dBm –20 dBm or greater
Digital output:	AES/EBU format, balanced output
	3 Vp-p, bi-phase
Headphones output:	Stereo (30 to 40 ohms load impedance)
Output level:	20 mW or greater (1 kHz, maximum level playback)
Playing speed:	Standard/0 ~ 3% (presetting in 0.2% steps)
Remote:	Parallel remote, D-sub 25-pin
RS422A:	Serial remote, D-sub 9-pin
Environmental conditions:	Temperature; 5°C ~ 35°C, Humidity; 25% ~ 85% (no condensation)
Duty:	Continuous
Power supply:	AC120/230/240V ±10%, 50/60 Hz
Power consumption:	25 W
External dimensions:	144(W) × 132(H) × 400(D) mm
Weight:	Approx. 5.5 kg
Playback frequency response:	20 Hz ~ 20 kHz within 1 dB range
Signal to noise ratio:	96 dB or greater (with respect to maximum level)
	("A" weighted)
Total harmonic distortion:	0.008% or less (at maximum level, 1 kHz)
Channel separation:	90 dB or greater (at maximum level, 1 kHz)
Audio signal rise time:	30 msec or less

* Design and specifications are subject to change or improvement without notice.

SPECIFICATIONS FOR SERIAL REMOTE

1. APPLICATION

This specification sheet is specified and described for serial input/output of model DN-951FA/961FA CD Player.

2. SPECIFICATIONS TO THE HARDWARE

2.1 Level: RS422A
2.2 Baud Rate 9600 bps
2.3 Connector: D-sub 9 pins (Female)

Pin No.	Signal Name	Pin No.	Signal Name
1	GROUND	6	GROUND
2	TXD (–)	7	TXD (+)
3	RXD (+)	8	RXD (–)
4	N.C	9	N.C
5	N.C		

2.4 Data Format: 8bit, EVEN parity, 1 stop bit

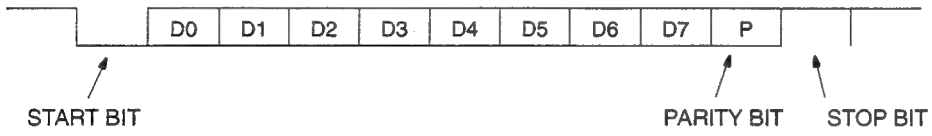

2.5 Input/Output Circuit

SN75158P or EQUIVALENT

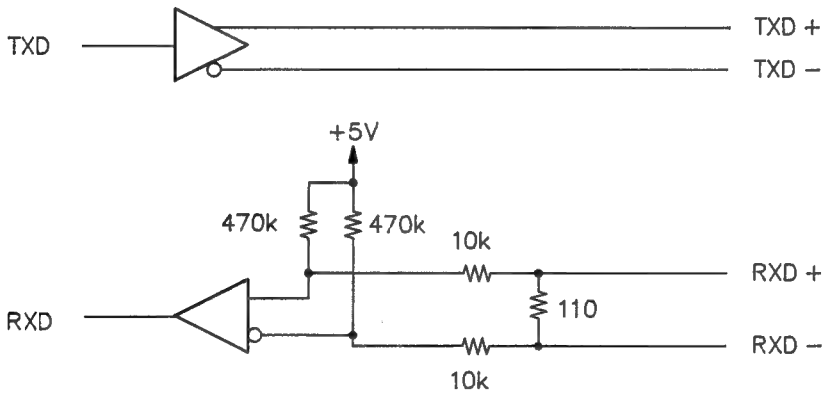

SN75157P or EQUIVALENT

3. SPECIFICATIONS TO THE SOFTWARE

3.1 COMMAND LIST

* Applied ASCII code for command

CODE	COMMAND NAME	PARAMETER	CONTENTS
A	SCAN	1 BYTE, SCAN MODE * ①	Reproduction with 1,2,4,8, and 16 times speed skipping

①	D7	D6	D5	D4	D3	D2	D1	D0	
	X	0	0	0	0	0	0	1	= Normal speed (×1)
	X	0	0	0	0	0	1	0	= 2-times speed (×2)
	X	0	0	0	0	1	0	0	= 4-times speed (×4)
	X	0	0	0	1	0	0	0	= 8-times speed (×8)
	X	0	0	1	0	0	0	0	= 16-times speed (×16)
	0	X	X	X	X	X	X	X	= FORWARD
	1	X	X	X	X	X	X	X	= REVERSE

CODE	COMMAND NAME	PARAMETER	CONTENTS
B	BACK CUE	NONE	Return to playback start position
C	TIME SEARCH	3 BYTES, A-TIME * ① – ③	STAND-BY after searching for designated time (A-TIME)

①	D7	D6	D5	D4	D3	D2	D1	D0	
									MIN × 1 (BCD)
									MIN × 10 (BCD)

②	D7	D6	D5	D4	D3	D2	D1	D0	
									SEC × 1 (BCD)
									SEC × 10 (BCD)

③	D7	D6	D5	D4	D3	D2	D1	D0	
									FRAME × 1 (BCD)
									FRAME × 10 (BCD)

CODE	COMMAND NAME	PARAMETER	CONTENTS
D	END MONITOR	NONE	Reproduction of end of track
E	SEND TIME	1 BYTE, TIME MODE * ①	Request the TIME of the location of the Pick-up

①	D7	D6	D5	D4	D3	D2	D1	D0	
	0	0	0	0	0	0	0	0	= P-TIME (ELAPSE)
	0	0	0	0	0	0	0	1	= P-TIME (REMAIN)
	0	0	0	0	0	0	1	0	= A-TIME (ELAPSE)
	0	0	0	0	0	0	1	1	= A-TIME (REMAIN)

Note: Fixed time is not available during the Pick-up moving at searching.

CODE	COMMAND NAME	PARAMETER	CONTENTS
G	Contents of the PRE-SET	NONE	Request the contents of the PRE-SET
H	ISRC CODE (International Standard Recording Code)	NONE	Request the ISRC CODE
I	INDEX SEARCH	1 BYTE, INDEX NO. * ①	STAND-BY after searching for designated INDEX within TRACK.

①	D7	D6	D5	D4	D3	D2	D1	D0	
									INDEX NO. × 1 (BCD)
									INDEX NO. × 10 (BCD)

CODE	COMMAND NAME	PARAMETER	CONTENTS
J	JUMP	1 BYTE, JUMP MODE * ①	Go up or down either TRACK or INDEX

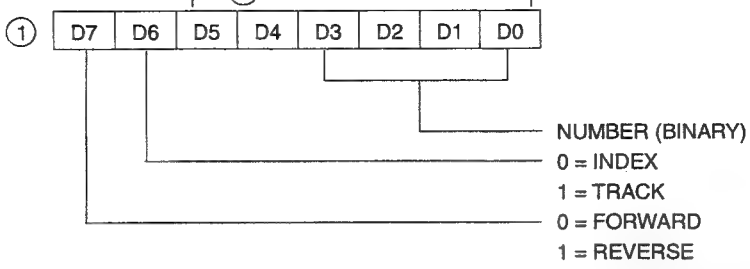

CODE	COMMAND NAME	PARAMETER	CONTENTS
K	CUEING	1 BYTE, FRAMES * ①	Moved playback point according to Frames designated by Parameter and repeating Audio signal for approx. 0.1 ~ 0.3 sec.

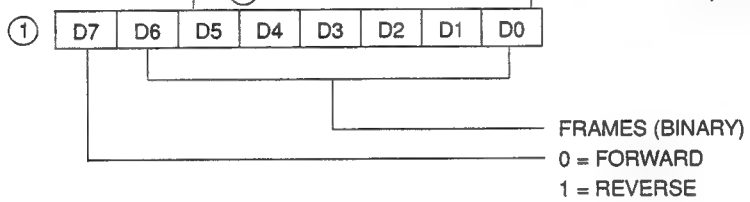

M

MODE SET — 1 BYTE, SYS MODE * ①

Setting all kinds of MODE on the DN-951FA/961FA

	① D7	D6	D5	D4	D3	D2	D1	D0	When cancelled
	X	0	0	0	0	0	0	1	= SINGLE/ (CONTINUE)
	X	0	0	0	0	0	1	1	= REMAIN/ (ELAPSE)
*	X	0	0	0	0	1	0	1	= TRACK MODE
*	X	0	0	0	0	1	1	0	= INDEX MODE
**	X	0	0	0	1	0	0	0	= S.REM MULTI (ID) MODE
	0	X	X	X	X	X	X	X	= CANCEL
	1	X	X	X	X	X	X	X	= SET

Note: * When set the TRACK or INDEX mode, no cancellation of former set mode required and change the mode using with DIRECT SET (D7=1).
** Set this mode when using with ID (PLAYER NO.).

O

OPTION — 1 BYTE, OPTION NO. * ①

Request the system information

	① D7	D6	D5	D4	D3	D2	D1	D0	
[0]	0	0	0	0	0	0	0	0	= TOC data of disc
[1]	0	0	0	0	0	0	0	1	= Beginning of a track (A-TIME)
[2]	0	0	0	0	0	0	1	0	= End of a track (A-TIME)
[3]	0	0	0	0	0	0	1	1	= Cue-up of a track (A-TIME)
[4]	0	0	0	0	0	1	0	1	= Contents of the system mode
[5]	0	0	0	0	1	0	0	1	= Version number of CPU on the DN-951FA/961FA
[6]	1	X	X	X	X	X	X	X	= TOC data of a designated track

TRACK NO. (BINARY)

CODE	COMMAND NAME	PARAMETER	CONTENTS
P	PLAY	NONE	Start playback
Q	TRACK SEARCH	1 BYTE, TRACK NO. * ①	STAND-BY after search and cue-up for a designated track

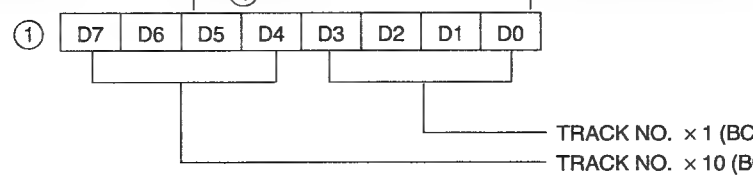

CODE	COMMAND NAME	PARAMETER	CONTENTS
R	RESET	NONE	Set DN-951FA/961FA to initial condition
S	STOP	NONE	Stop playback (Servo = off)
T	TIME SEARCH	3 BYTES, P-TIME * ① – ③	STAND-BY after searching for a designated time (P-TIME) of a track

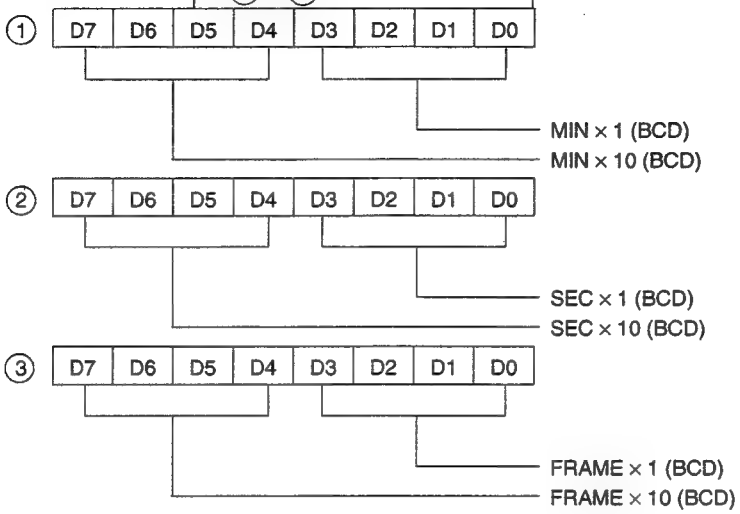

U	PRESET MEMORY	1 BYTE, * ①	Changing a specified bit of a Pre-set memory

① D7 D6 D5 D4 D3 D2 D1 D0

X	X	X	X	X	0	0	0	= BIT 1
X	X	X	X	X	0	0	1	= BIT 2
X	X	X	X	X	0	1	0	= BIT 3
X	X	X	X	X	0	1	1	= BIT 4
X	X	X	X	X	1	0	0	= BIT 5
X	X	X	X	X	1	0	1	= BIT 6
X	X	X	X	X	1	1	0	= BIT 7
X	X	X	X	X	1	1	1	= BIT 8
X	0	0	0	0	X	X	X	= d 1
X	0	0	0	1	X	X	X	= d 2
X	0	0	1	0	X	X	X	= d 3
X	0	0	1	1	X	X	X	= d 4
X	0	1	0	0	X	X	X	= d 5
X	0	1	0	1	X	X	X	= d 6
X	0	1	1	0	X	X	X	= d 7
0	X	X	X	X	X	X	X	= CANCEL
1	X	X	X	X	X	X	X	= SET

V	VARI SET	1 BYTE, VARI SPEED * ①	To set or cancel of the variable speed

① D7 D6 D5 D4 D3 D2 D1 D0

–100 (9ch) – 100 (64H)
(2's Compliment)
= Setting value for variable speed between –10.0% to +10.0%

80H = Cancellation of variable speed (Normal speed)

CODE	COMMAND NAME	PARAMETER	CONTENTS
W	PAUSE	NONE	Interrupting playback
X	SEND STATUS	NONE	Sending a atatus of DN-951FA/961FA
Y	STAND-BY	NONE	STAND-BY from cueing
Z	"RESERVED"	NONE	

Note; When the player controlled using with ID (PLAYER NO.),

1. In the first place, set the mode [M]-[10001000] after that, the player will receive the command including the ID.
2. Place the ID (1 BYTE) at the next of control command.
   Example ; with the ID --- [COMMAND]-[ID]-[DATA]
   without the ID --- [COMMAND]-[DATA]
3. When using [11111111] for ID, all players which have been set the ID will receive the command.

3.2 STATUS AND ANSER LIST

CODE	STATUS NAME	PARAMETER	CONTENTS
A	ACKNOWLEDGE	NONE	Receiving a command (Answer for a command of A,B,C,D,I,J,K,M,P,Q,S,T,U,V,W,Y,Z)
B	STAND-BY	NONE	During "STAND-BY" (Answer for a [X] command)
C	END MONITOR	NONE	During "END MONITOR" (Answer for a [X] command)
D	TRAY DOWN	NONE	During "TRAY DOWN" (Answer for a [X] command)
E	ERROR	1 BYTE * ①	Sending "ERROR CODE" (Answer for a [X] command)

① D7 D6 D5 D4 D3 D2 D1 D0

1	0	0	0	0	1	0	0	= HARDWARE ERROR
1	0	0	0	0	1	0	1	= FOCUS ERROR
1	0	0	0	0	1	1	0	= CLV ERROR
1	0	0	0	0	1	1	1	= SUBCODE ERROR
1	0	0	0	1	0	0	0	= SEEK ERROR

F	FINISH	NONE	Playback completed (Answer for a [X] command
G	PRE-SET	7 BYTES, * ① – ⑦	Sending contents of PRE-SET (Answer for a [G] command)

① D7 D6 D5 D4 D3 D2 D1 D0

- D0 = 1 = (d1 – BIT 1) ON
- D1 = 1 = (d1 – BIT 2) ON
- D2 = 1 = (d1 – BIT 3) ON
- D3 = 1 = (d1 – BIT 4) ON
- D4 = 1 = (d1 – BIT 5) ON
- D5 = 1 = (d1 – BIT 6) ON
- D6 = 1 = (d1 – BIT 7) ON
- D7 = 1 = (d1 – BIT 8) ON

② D7 D6 D5 D4 D3 D2 D1 D0

- d2 (BIT 1 – BIT 8)

③ D7 D6 D5 D4 D3 D2 D1 D0

- d3 (BIT 1 – BIT 8)

④ D7 D6 D5 D4 D3 D2 D1 D0

- d4 (BIT 1 – BIT 8)

⑤ D7 D6 D5 D4 D3 D2 D1 D0

- d5 (BIT 1 – BIT 8)

<table>
<tr><th>CODE</th><th>STATUS NAME</th><th>PARAMETER</th><th>CONTENTS</th></tr>
<tr><td>G</td><td colspan="3">
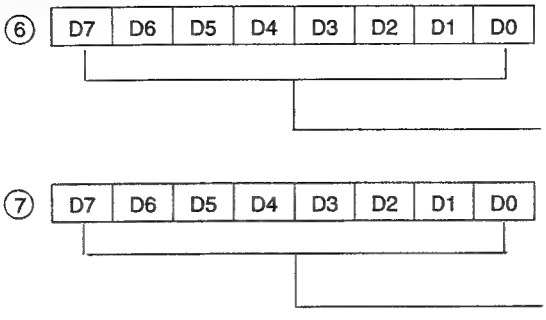

</td></tr>
<tr><td>H</td><td>ISRC</td><td>12 BYTES,
* ① – ⑫</td><td>Sending "IRSC"
(Answer for a [H] command)</td></tr>
<tr><td></td><td colspan="3">
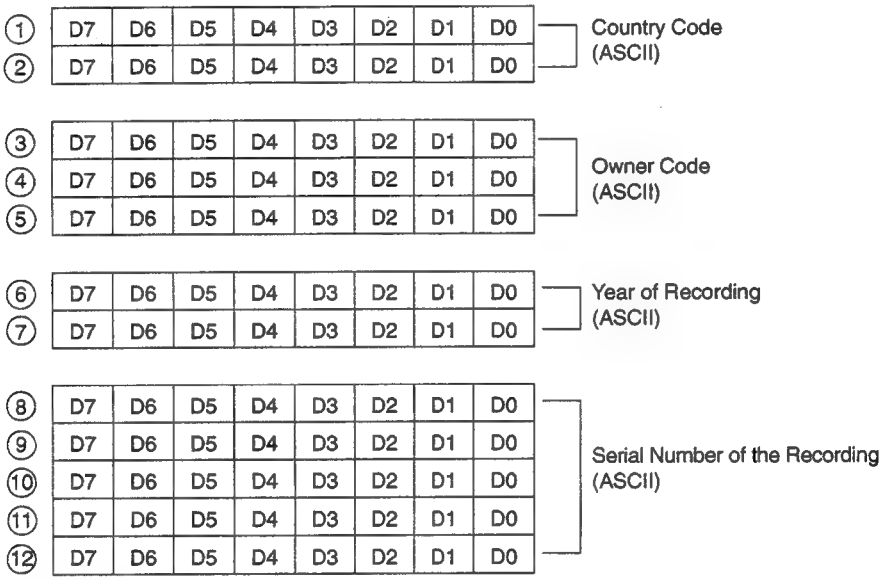

</td></tr>
<tr><td>I</td><td>INVALID COMMAND</td><td>NONE</td><td>Incorrect command (Answer for a command of A,B,C,D,I,J,K,M,P,Q,S,T,U,V,W,Y,Z)</td></tr>
<tr><td>O</td><td>OPTION</td><td>5 BYTES,
* ① – ⑤</td><td>Answer of OPTION COMMAND</td></tr>
<tr><td></td><td colspan="3">1) Answer for option command [0]
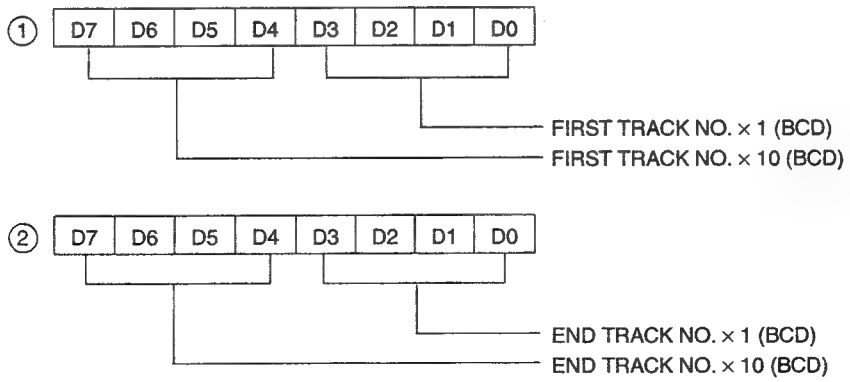

</td></tr>
</table>

CODE	STATUS NAME	PARAMETER	CONTENTS
0			

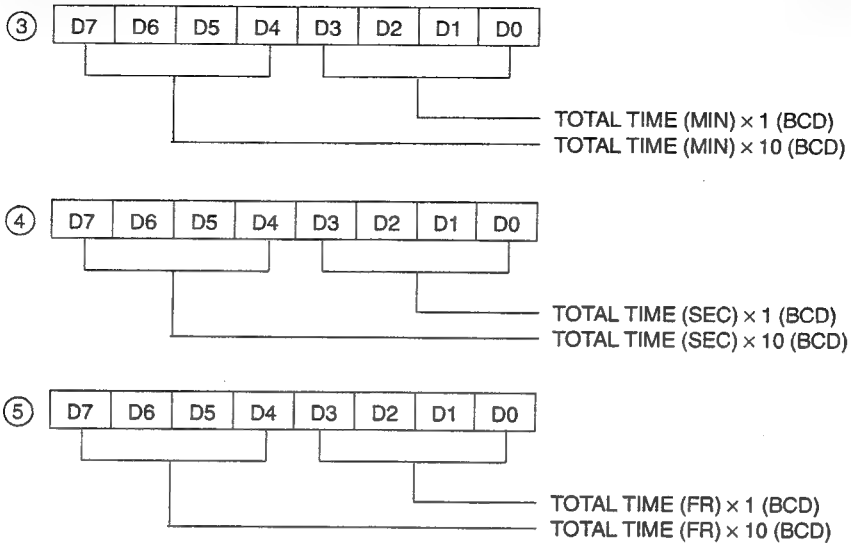

2) Answer for option command [1], [2], and [3]

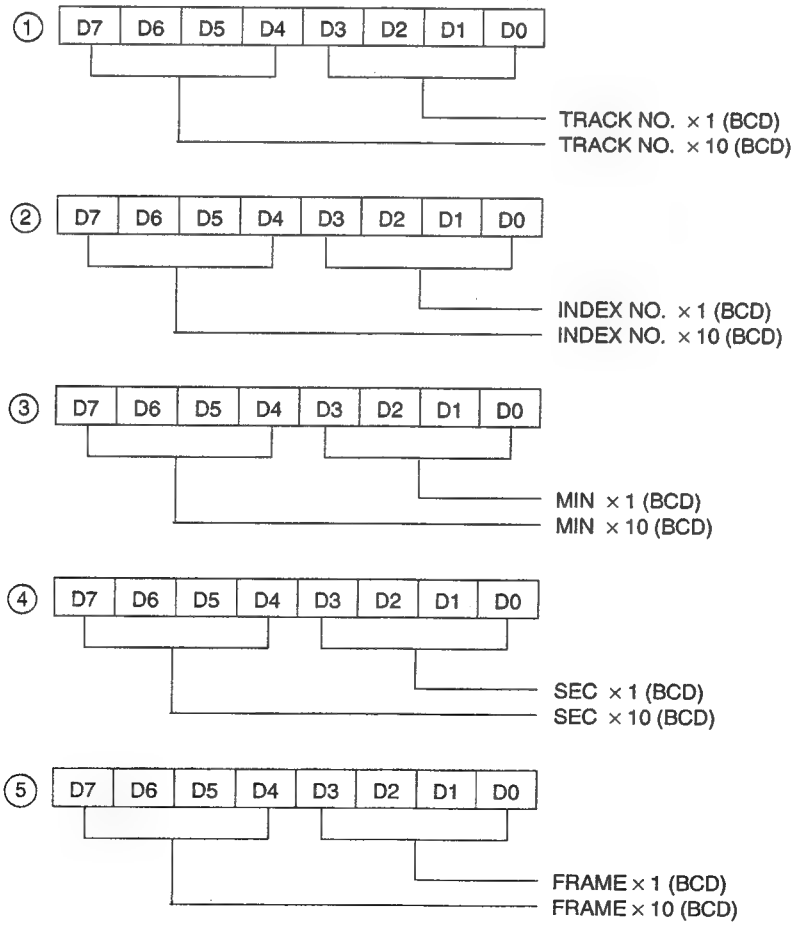

CODE	STATUS NAME	PARAMETER	CONTENTS

3) Answer for option command [4]

	D7	D6	D5	D4	D3	D2	D1	D0	
①	D7	D6	D5	D4	D3	D2	D1	D0	"RESERVED"
②	D7	D6	D5	D4	D3	D2	D1	D0	"RESERVED"
③	D7	D6	D5	D4	D3	D2	D1	D0	"RESERVED"
④	D7	D6	D5	D4	D3	D2	D1	D0	"RESERVED"
⑤	D7	D6	D5	D4	D3	D2	D1	D0	

D0 = 1 : (PLAY MODE) SINGLE
D1 = 1 : LED (VARI) ON
D2 = 1 : LED (REM) ON
D3 = 1 : LED (IDX) ON

4) Answer for option command [5]

	D7	D6	D5	D4	D3	D2	D1	D0	
①	D7	D6	D5	D4	D3	D2	D1	D0	"RESERVED"
②	D7	D6	D5	D4	D3	D2	D1	D0	"RESERVED"
③	D7	D6	D5	D4	D3	D2	D1	D0	"RESERVED"
④	D7	D6	D5	D4	D3	D2	D1	D0	CPU NO. Upper two figures (BCD)
⑤	D7	D6	D5	D4	D3	D2	D1	D0	CPU NO. Lower two figures (BCD)

5) Answer for option command [6]

	D7	D6	D5	D4	D3	D2	D1	D0	
①	D7	D6	D5	D4	D3	D2	D1	D0	"RESERVED"
②	D7	D6	D5	D4	D3	D2	D1	D0	

D0 = 1 : Track for lockout of reproduction

	D7	D6	D5	D4	D3	D2	D1	D0	
③	D7	D6	D5	D4	D3	D2	D1	D0	

D0 = MIN × 1 (BCD)
D1 = MIN × 10 (BCD)

	D7	D6	D5	D4	D3	D2	D1	D0	
④	D7	D6	D5	D4	D3	D2	D1	D0	

D0 = SEC × 1 (BCD)
D1 = SEC × 10 (BCD)

	D7	D6	D5	D4	D3	D2	D1	D0	
⑤	D7	D6	D5	D4	D3	D2	D1	D0	

D0 = FRAME × 1 (BCD)
D1 = FRAME × 10 (BCD)

P	PLAY	NONE	During "PLAYBACK" (Answer for [X] command)
Q	MANUAL SEARCH	NONE	Output audio signals during manual search (Answer for [X] command)
R	READY	NONE	Disc not loaded (Answer for [X] command)
S	SEARCH	NONE	Moving the pick-up by searching function (Answer for [X] command)

CODE	STATUS NAME	PARAMETER	CONTENTS
T	TIME	5 BYTES * ① – ⑤	Sending "TIME" (Answer for [E] command)
U	PAUSE	NONE	During "PAUSE" (Answer for [X] command)

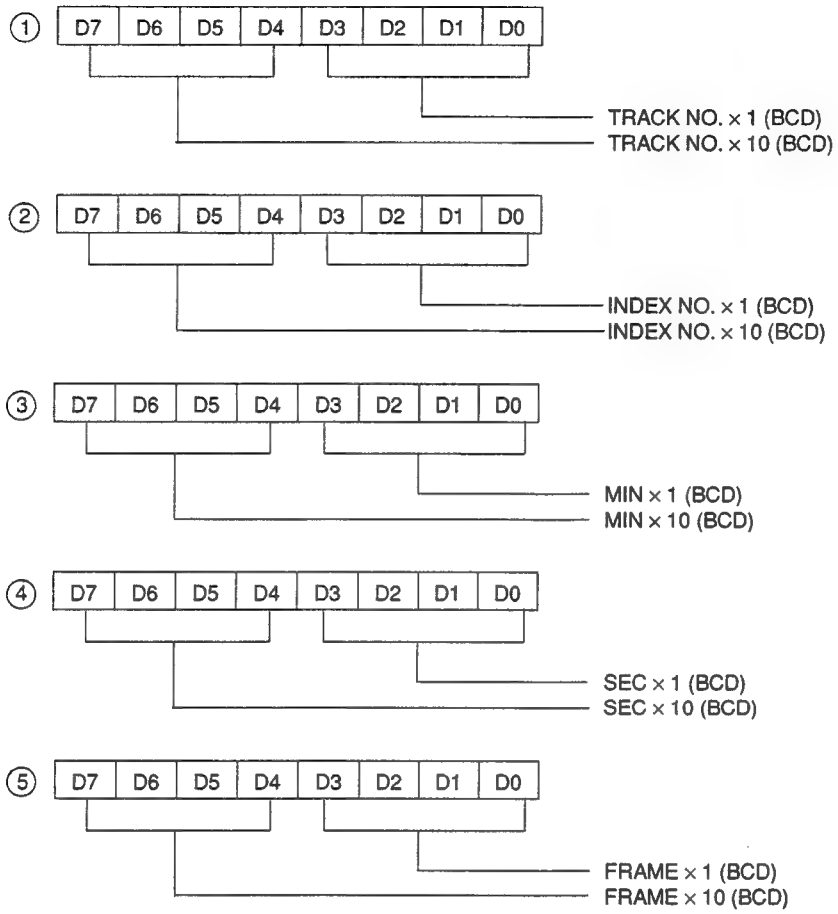

3.3 NOTES FOR DESIGNING THE CONTROLLER

1) Please give attention, that the DN-951FA/961FA do not receive any command for 0.5 sec after power supply "ON" or receive "RESET" [R] command for initializing the unit.
2) Send next command from the controller after receive of "ACKNOWLEDGE" [A] or "INVALID COMMAND" [I] or STATUS CODE when sending the first command.
3) There are some command that may receive only in specified status.

NOTE FOR HANDLING OF LASER PICK-UP

DESCRIPTION OF THE COMPONENTS

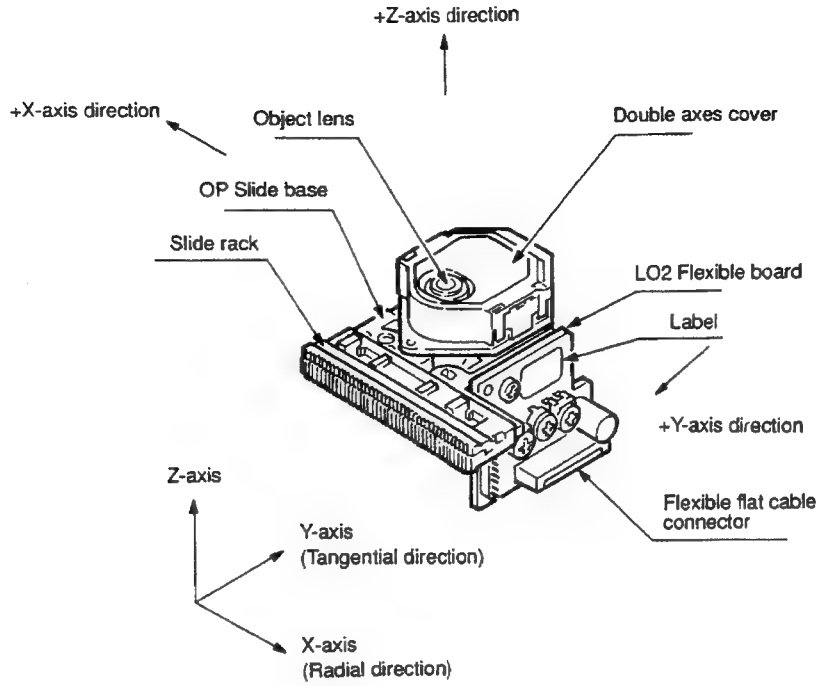

Label

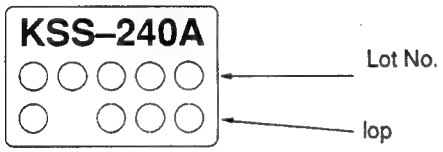

year
(last figure)
day month | quality control No.
○○ ○ ○ ○

but Oct. Nov. and Dec. are expressed by alphabetical letters of X, Y and Z.

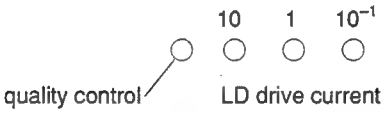

The expressed unit is by mA, with omission of the decimal point as for example, 56.5mA will be expressed as 565, but the head of English letter means the control in the manufacturning plant.

PIN CONNECTOR

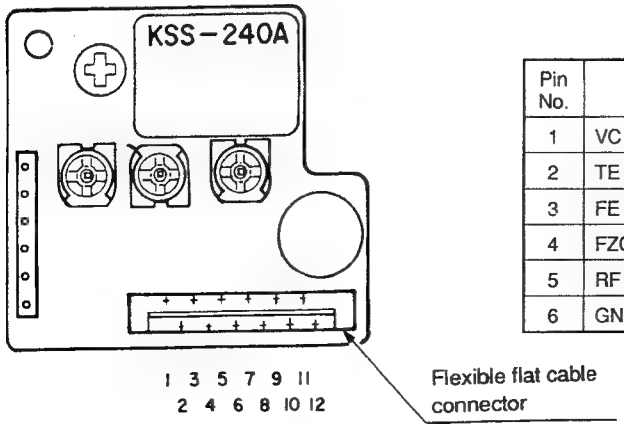

Pin No.	Description	Input/ Output	Pin No.	Description	Input/ Output
1	VC (+2.5V)	OUT	7	Vcc (+5V)	IN
2	TE (TRK ER signal)	OUT	8	LDC (LD Control)	IN
3	FE (FCS ER signal)	OUT	9	FCS+ (Double axes)	IN
4	FZC (FZC signal)	OUT	10	TRK+ (Double axes)	IN
5	RF (RF signal)	OUT	11	TRK– (Double axes)	IN
6	GND	IN	12	FCS– (Double axes)	IN

Caution for Handling the Laser Pick-up

The laser pick-up KSS-240A is assembled and precisely adjusted using a sophisticated manufacturing process in our plant. Do not disassemble or attempt to readjust it. Please keep the following instructions carefully in handling pick-up.

1. Handle with Care

(1) Storage
Do not store the pick-up in dusty, high-temperatured or high-humidity environments.

(2) Please take care for preventing from shock by falling down or careless handling.

2. Laser Diode (LD)

(1) Protect your eyes
The laser beam may damage the human eye, since the intensity of the focused spot may reach 7×10^3 W/cm^2 even if the intensity at the objective lens is 400 μW maximum. As the light beam spreads after focused through the objective lens, it does not effect you in the place as far as more than 30 cms. However, do not look at the laser light beam either through the objective lens directly nor another lens or a mirror.

(2) Poison of As
Since the LD chip contains As (Arsenic), as GaAs + GaAlAs, as known as the poison, although the poison is relatively weak, in comparing with others, e.g.As_2O_3, $AsCl_3$ etc., and the amount is small, avoid putting the chip in acid or an alkali solution, heating it over 200°C or putting it into your mouth.

(3) Avoid surge current or electrostatic discharge
The LD may be damaged or deteriorated by its own strong light if a large current is supplied to it, even if only a short pulse.
Make sure that there is no surge current in the LD driving circuit by switches or else. Be careful to handle pick-up as it may be damaged in a moment by human electrostatic discharge. The pins of the LD are short-circuited by solder for protection during shipment.
For safety handling of an LD, grounding the human body, measuring equipments and jig is strongly recommended. And still it is further desirable to make use of mat on the platform and floor for handling the LD.
To open the short-circuit, remove the soldering quickly with a soldering iron whose metal part is grounded.
The temperature of the soldering iron should be less than 320°C (30W).

3. Actuator

(1) The performance of the actuator may be effected if magnetic material is located nearby, since the actuator has a strong magnetic circuit. Do not permit dust to enter through the clearance of the cover.

(2) Cleaning the lens
It may change the specifications by attaching dust or ash on the objective lens. Clean the lens with a cleaning paper dampened with a little water, not pressing lens with so much strength by the cleaning paper.

4. Metal Bearing

As the metal bearing of Cu-compound sintered alloy is impregnated with FROIL946P (*Part No. 529 0054 007), never fail to supply the bushing with the same lubricant at the time of replacing the pick-up.

5. Handling

Please handle the laser pick-up with holding the side base (rosin molded part).
When either a part of human body or some other things may happen to touch directly with the circuit part of P.W.Board, it may cause deterioration, take careful attention in handling this base.

DISASSEMBLY [DN-951FA]

● **TOP COVER**

Remove 4 screw (201) and pull the top cover to arrow direction.

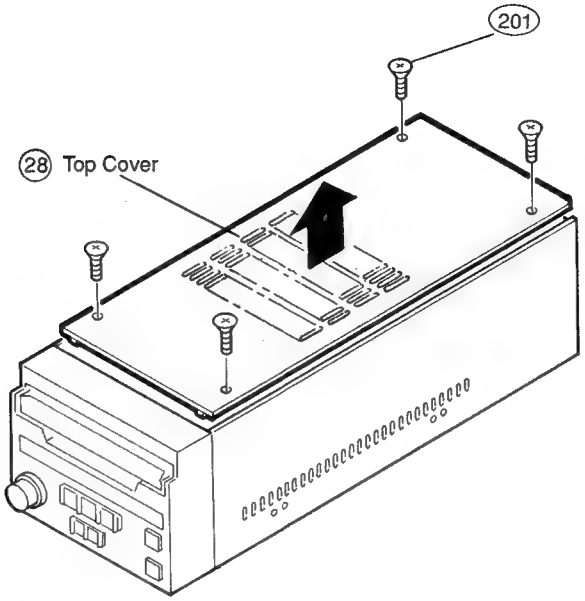

● **FRONT PANEL**

1. Remove 2 screws (201) and detach the front panel in A, B order, and disconnect the CN-17 27 from the SERVO unit.
2. When attach the front panel, set the mecha.chassis lug to front panel assembly groove, as per complementary figure.

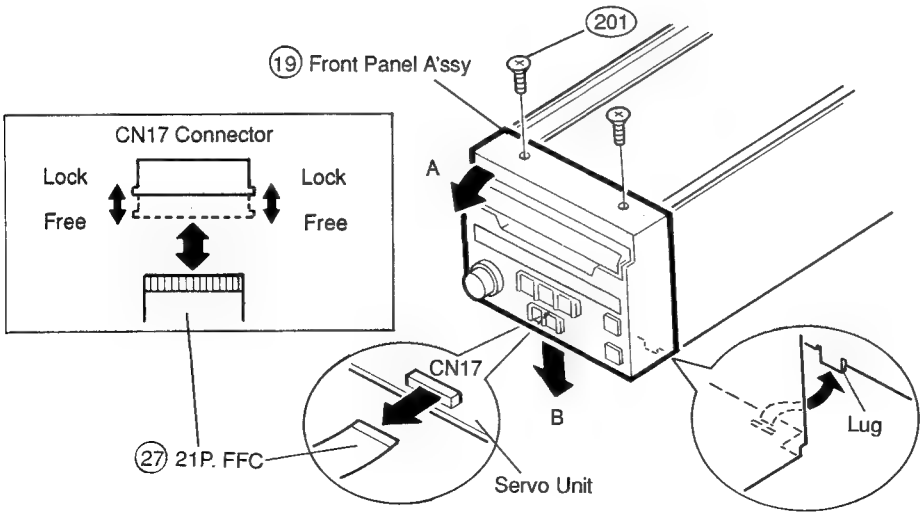

● **BOTTOM COVER**

Remove 4 bottom cover screws (204) .

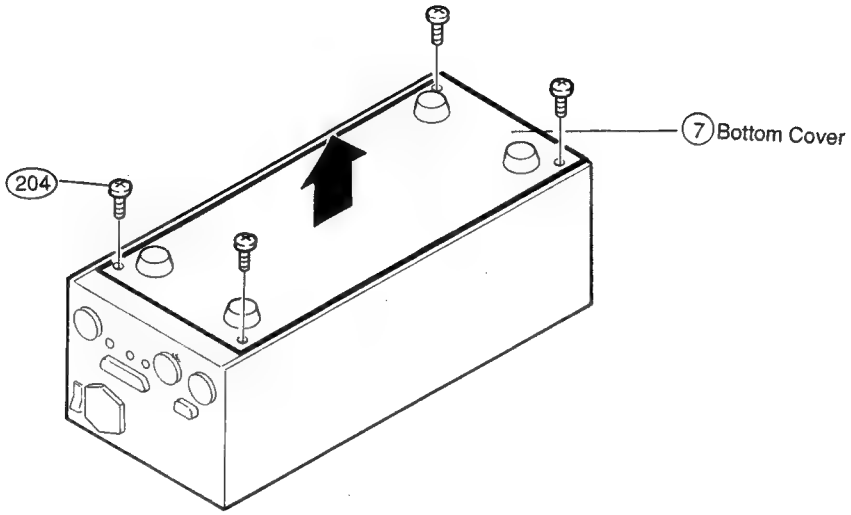

● **REAR PANEL**

1. Remove 2 screws (201) on both sides, 2 screws (203) on the top.

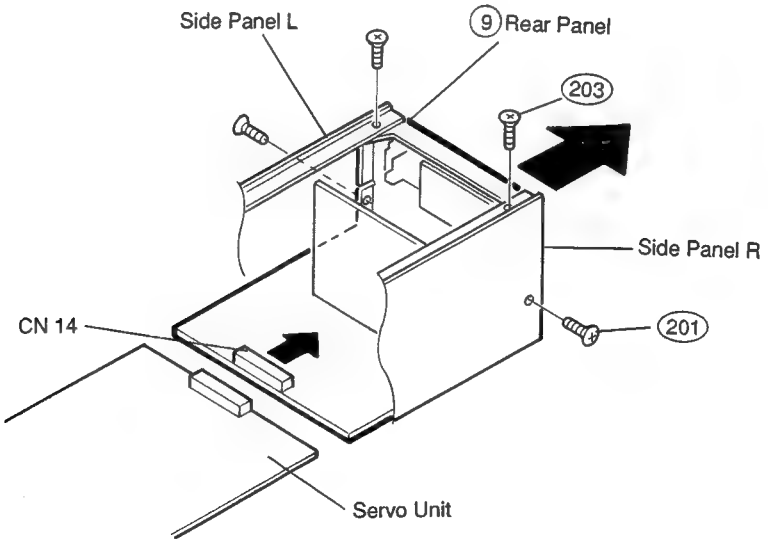

2. Detach portion CN14 of the servo unit and pull it out backwards.
3. Disconnect CN10 (lead wire from the power transformer) of the filter unit.
4. Remove screws of GND wire fixed to the chassis.

● SERVO UNIT

1. After removing front panel and bottom cover,remove 4 screws(201) fixing the servo unit.

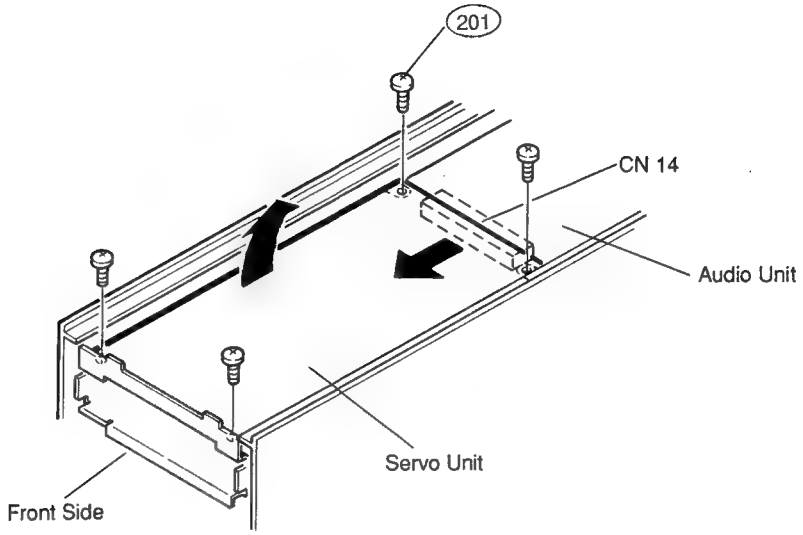

2. Pull out connector portion (CN 14) connected to the audio unit frontwards. Detach the servo unit from mech. chassis.
3. After detaching of the servo unit, disconnect each connector and wires.

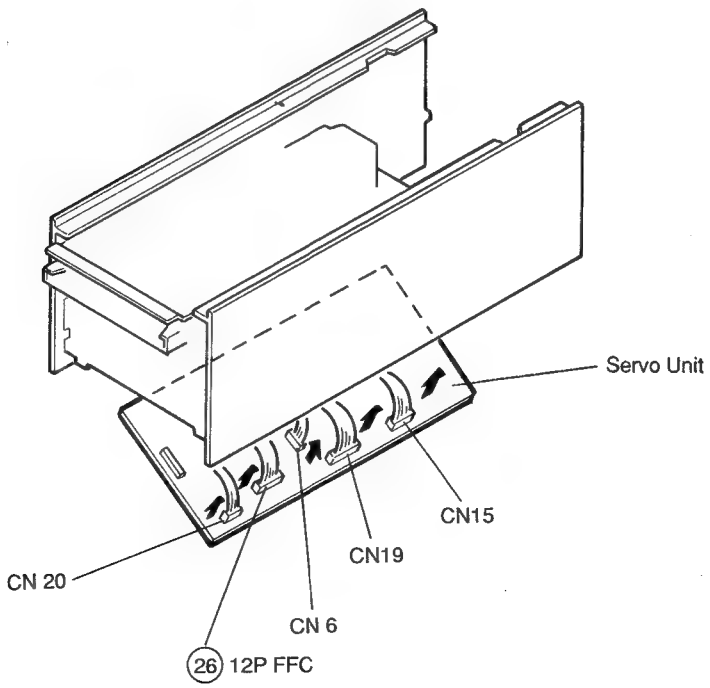

● **LOADING SUB**

Remove 4 screws marked with " A " (209) , " B "(201) and take out the Mecha. base.

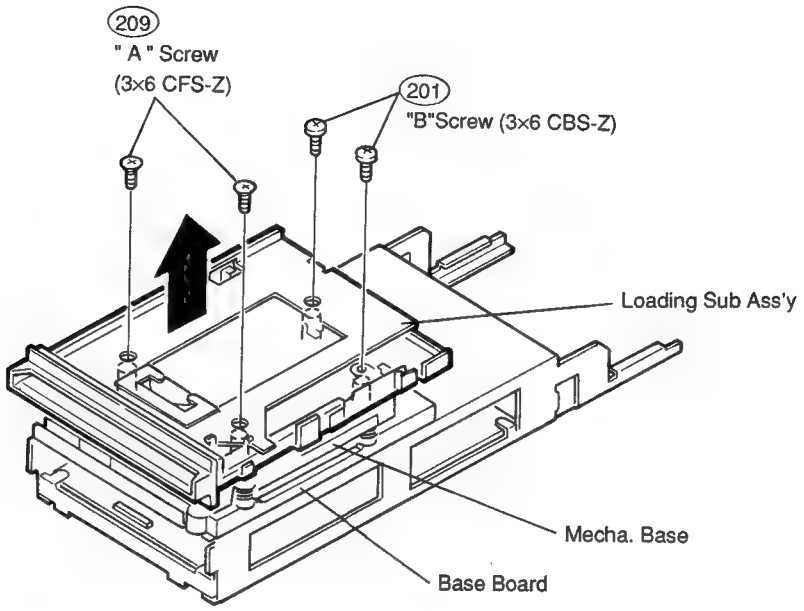

● **MECHANISM-BASE**

Remove 4 screws, disconnect a connector, and pull the mecha base assembly to arrow direction.

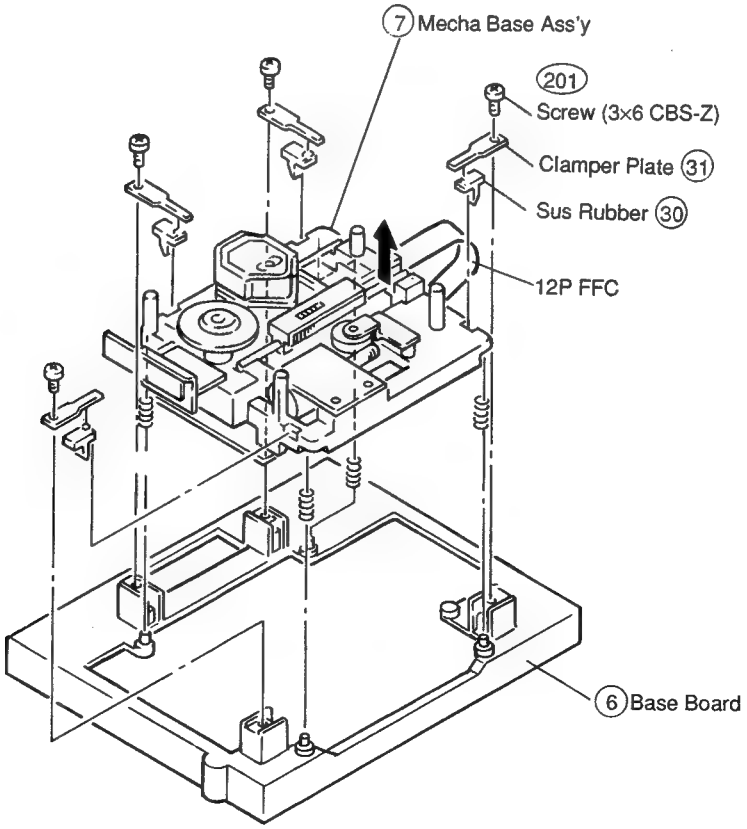

● **OPT. PICKUP**

Remove 4 screws (203) and detach the optical pick-up together with slide shafts to arrow direction.

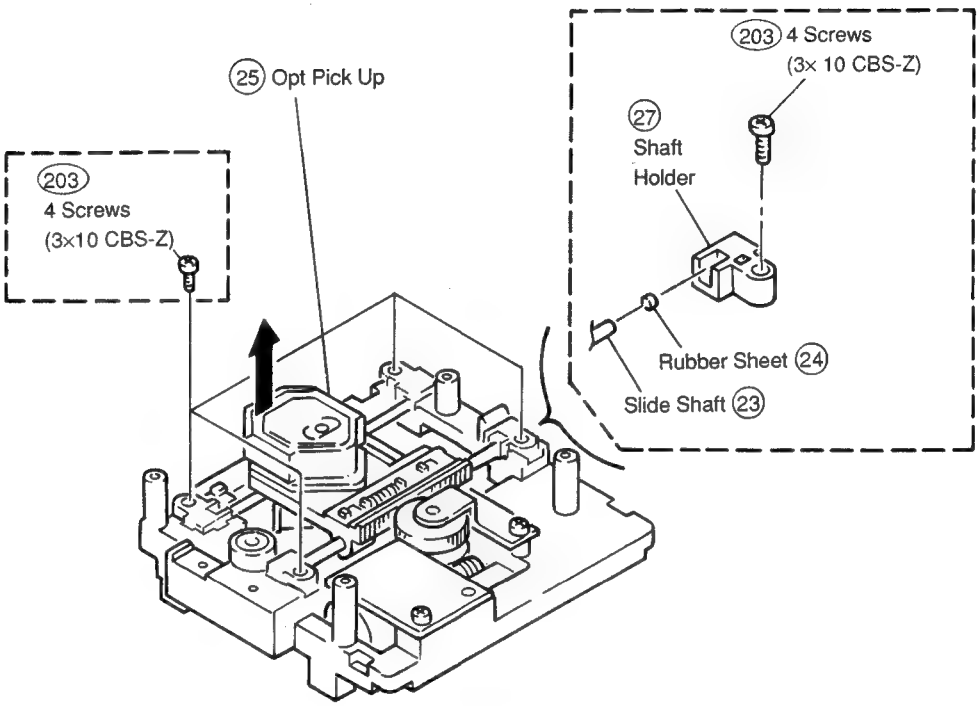

● SLIDE MOTOR

1. Use slide motor jig to install slide motor sub assembly to mecha. base assembly.
2. Assembling procedure
   1) Insert the shaft standing on slide motor sub assembly to the hole on mecha. base assembly loosely.
   2) Screw the slide motor sub assembly to mech. base eassembly loosely.
   3) Place jig between worm-gear and helical-gear shaft, and adjust slide motor sub assembly so that worm-gear, jig and helical-gear shaft touch each other.
   4) Fix the screw firmly and remove the jig.

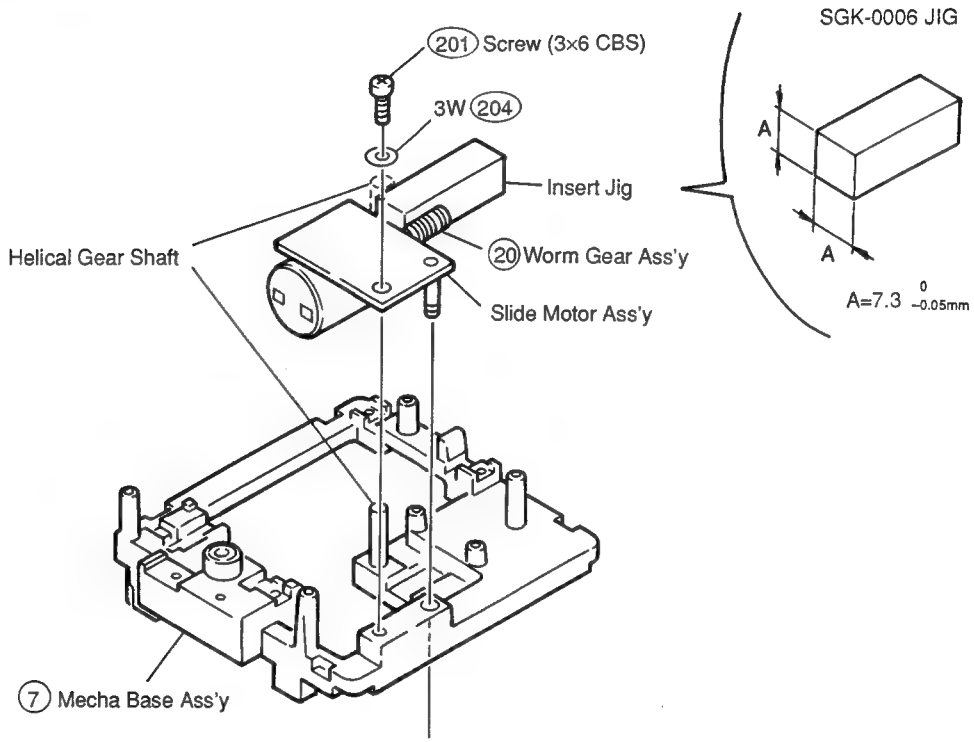

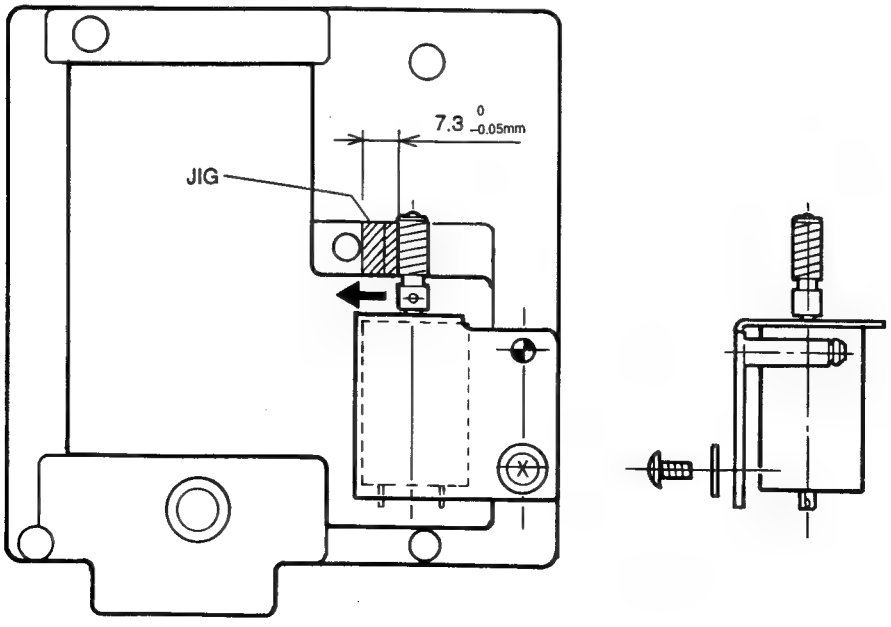

● **TO ATTACH WORM-GEAR TO SLIDE MOTOR SHAFT**

To attach Worm-Gear Ass'y to Slide-Motor shaft, insert the Jig between Worm-Gear Ass'y and Motor Bracket Ass'y and fix worm-gear fixing screw so that 0.5 mm gap is maintained.

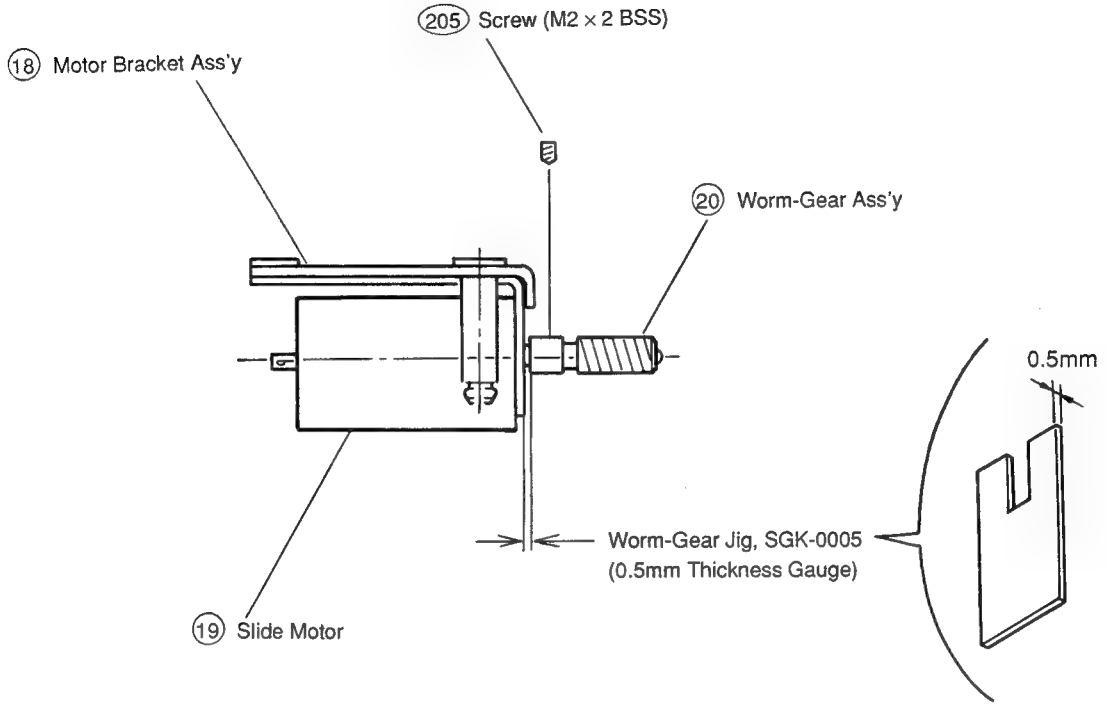

● **TURNTABLE**

Loosen one BSS (3× 3) screw of turntable assembly, and pull the turntable assembly to arrow direction.

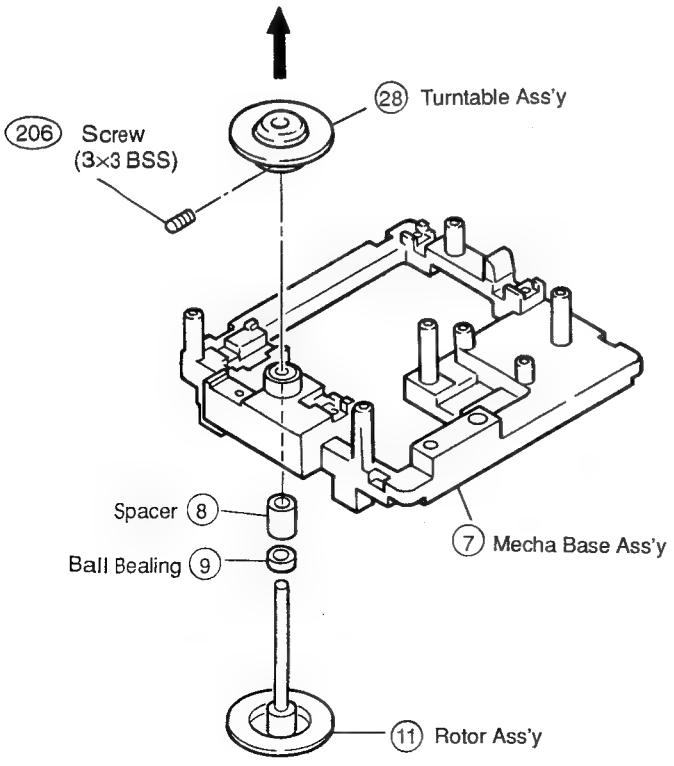

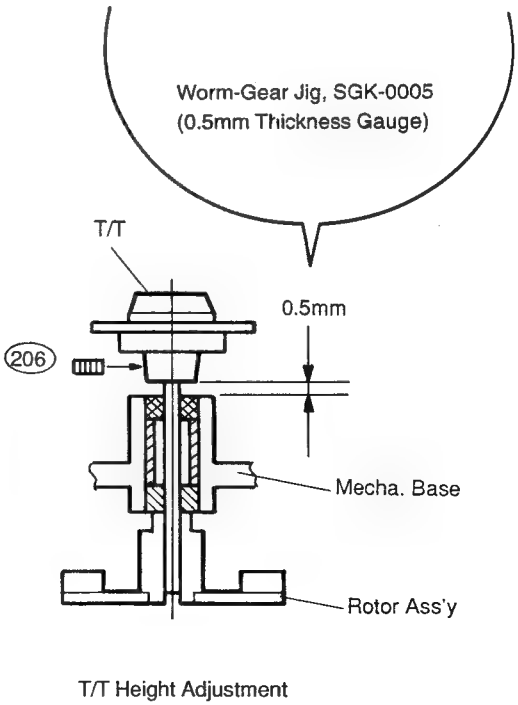

T/T Height Adjustment

● **MOTOR DRIVE UNIT**

Remove a special screw, a screw, and detach the motor drive unit.

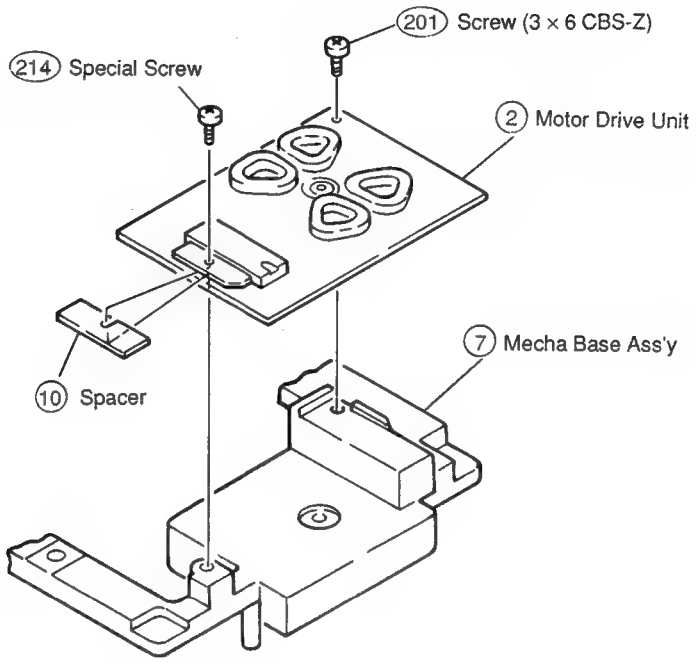

● **AUDIO UNIT**

Remove 7 screws (204) from real panel and a Jack bracket, and disconnect each connector wire.

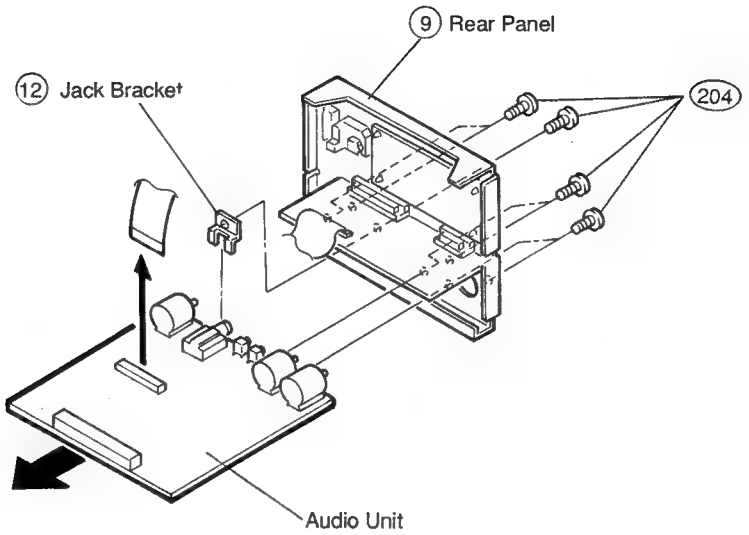

● **DC POWER UNIT**

1. Remove one screw (201) on the Side Panel L.
2. Disconnect connector wire.
3. Detach DC Power Unit from 2 places on the locking card spacer.

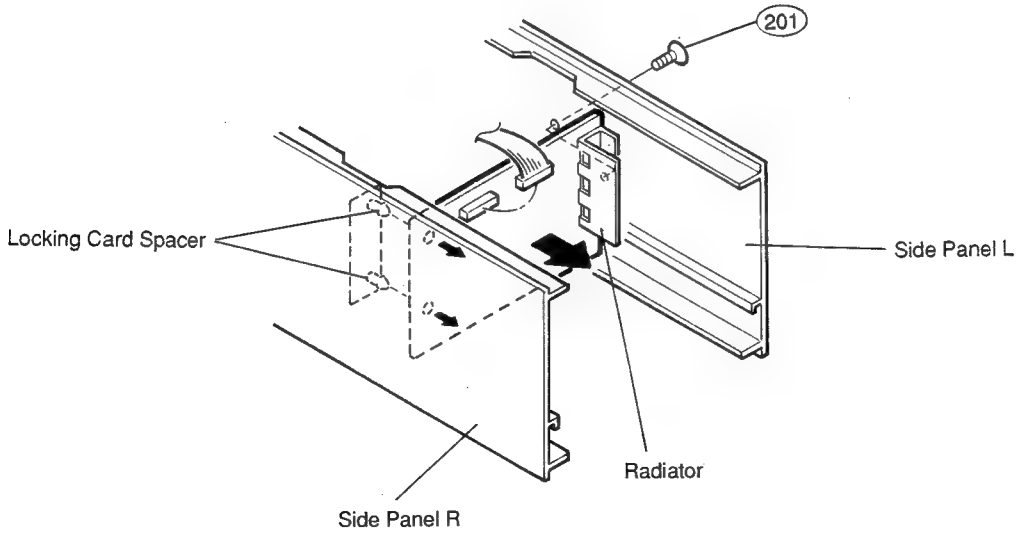

DISASSEMBLY [DN-961FA]

● **TOP COVER**

Remove 4 screws (201) and pull the top cover to arrow direction.

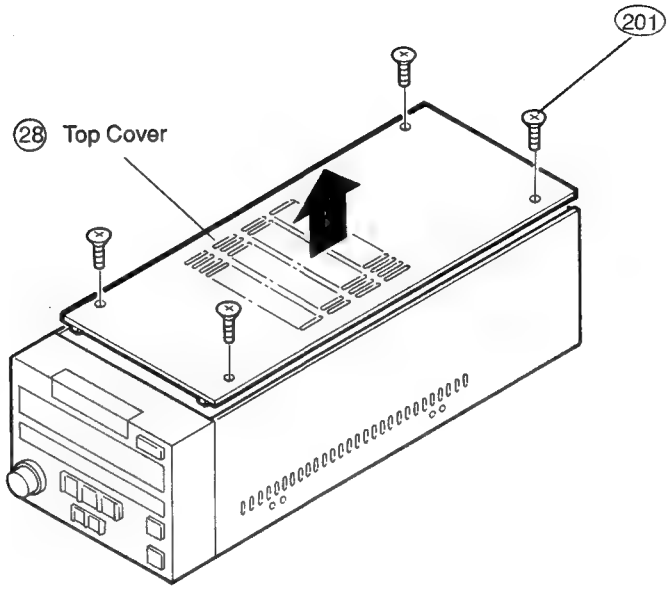

● **FRONT PANEL**

1. Remove 2 screws (201) and detach the front panel in A, B order, and disconnect the CN-17 (27) from the SERVO unit.
2. When attach the front panel, set the mecha. chassis lug to frontpanel assembly groove, as per complementary figure.

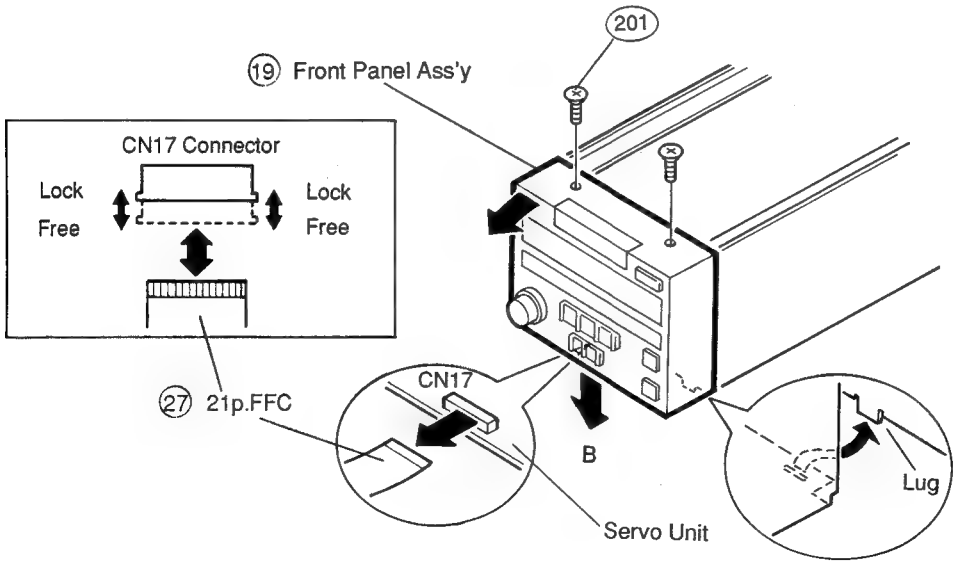

● **BOTTOM COVER**

Remove 4 bottom cover screws (204) and pull the bottom cover to arrow direction.

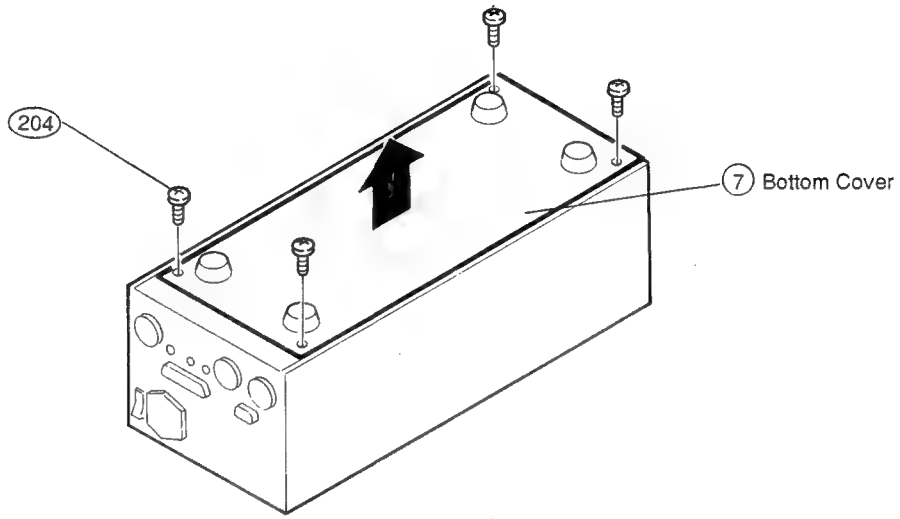

● **REAR PANEL**

1. Remove 2 screws (201) on both sides, 2 screws (203) on the top.

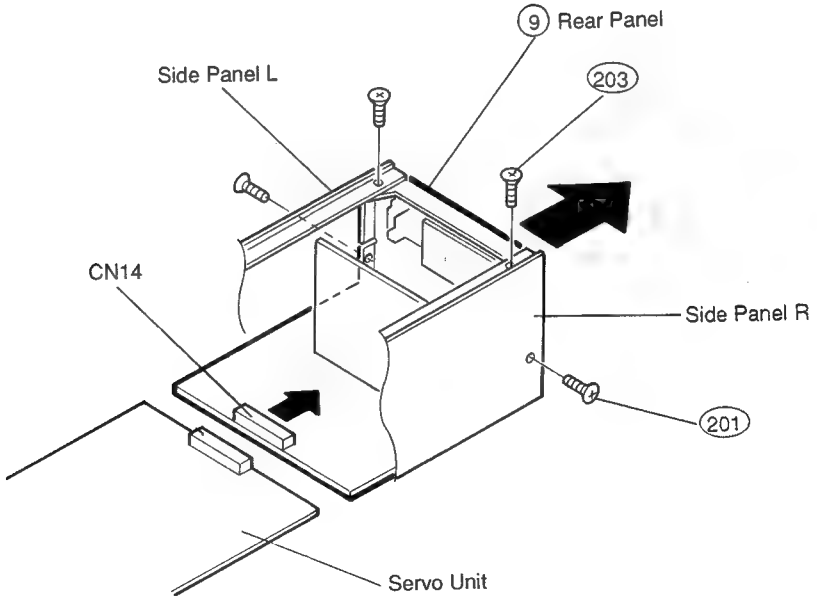

2. Detach portion CN14 of the servo unit and pull it out backwards.
3. Disconnect CN10 (lead wire from the power transformer) of the filter unit.
4. Remove screws of GND WIRE fixed to the chassis.

● **SERVO UNIT**

1. After removing front panel and bottom cover, remove 4 screws (201) fixing the servo unit.

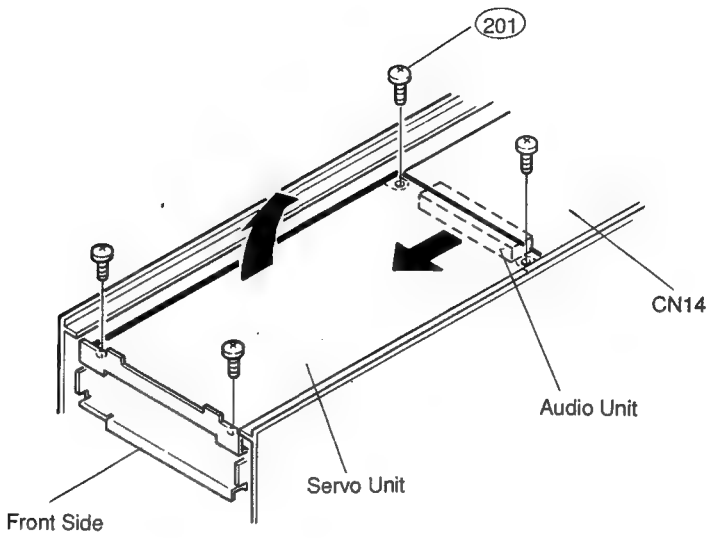

2. Pull out connector portion (CN14) connected to the audio unit frontwards. Detach the servo unit from mecha, chassis.
3. After detaching of the servo unit, disconnect each connector and wire.

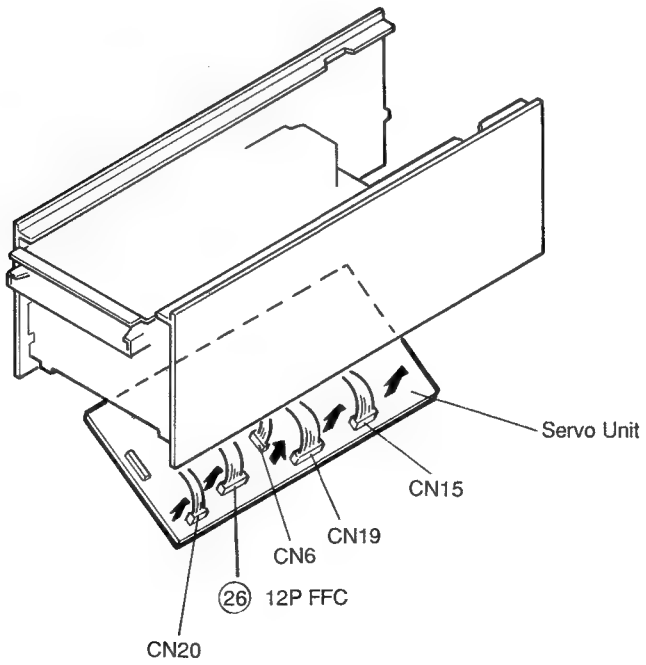

● LOADING SUB

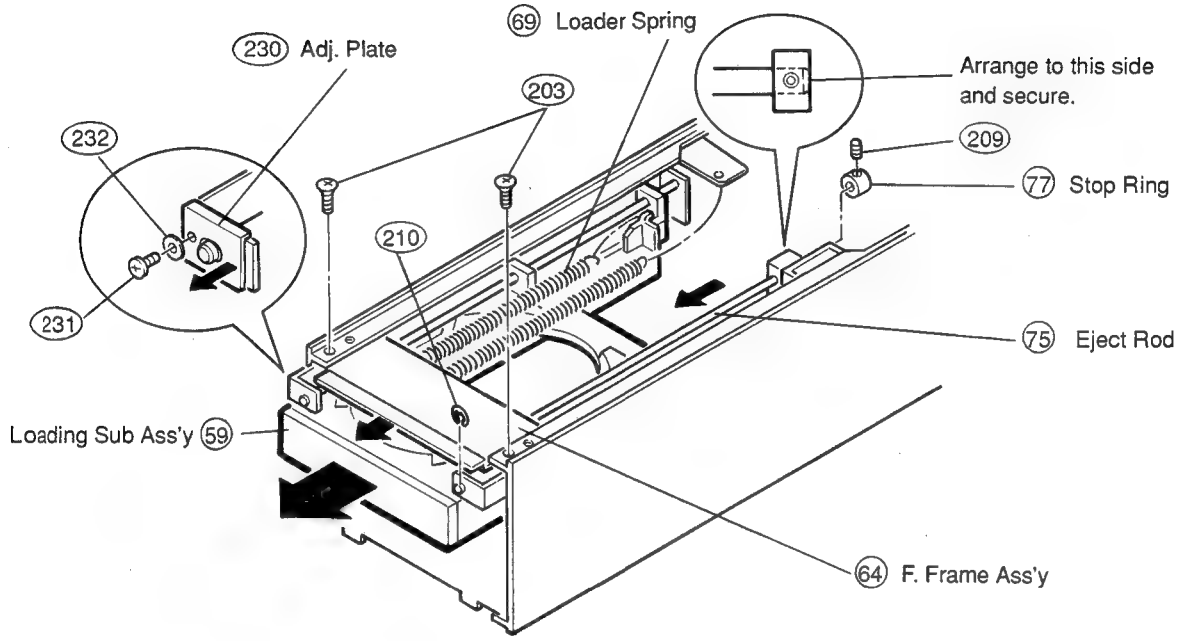

1. After detaching of Front Panel, remove bond on one side of Loader Spring (69) (Side of Loading Sub Ass'y) and undo hook.
2. Remove 2 screws (203) fixing F. Frame Ass'y (64) , E. Ring (210) , one screw (231) , Washer (232) , Adj. Plate (230) , Stop Ring (77) and one screw (209) fixing it.
3. Pull out the F. Frame Ass'y (64) and Eject rod (75) frontwards.
4. Pull Loader Sub Ass'y (59) toward front and detach them. (Note: When pulling, pull slowly.)

● **MECHANISM-BASE**

Remove 4 screws, disconnect a connector, and pull the mecha base assembly to arrow direction.

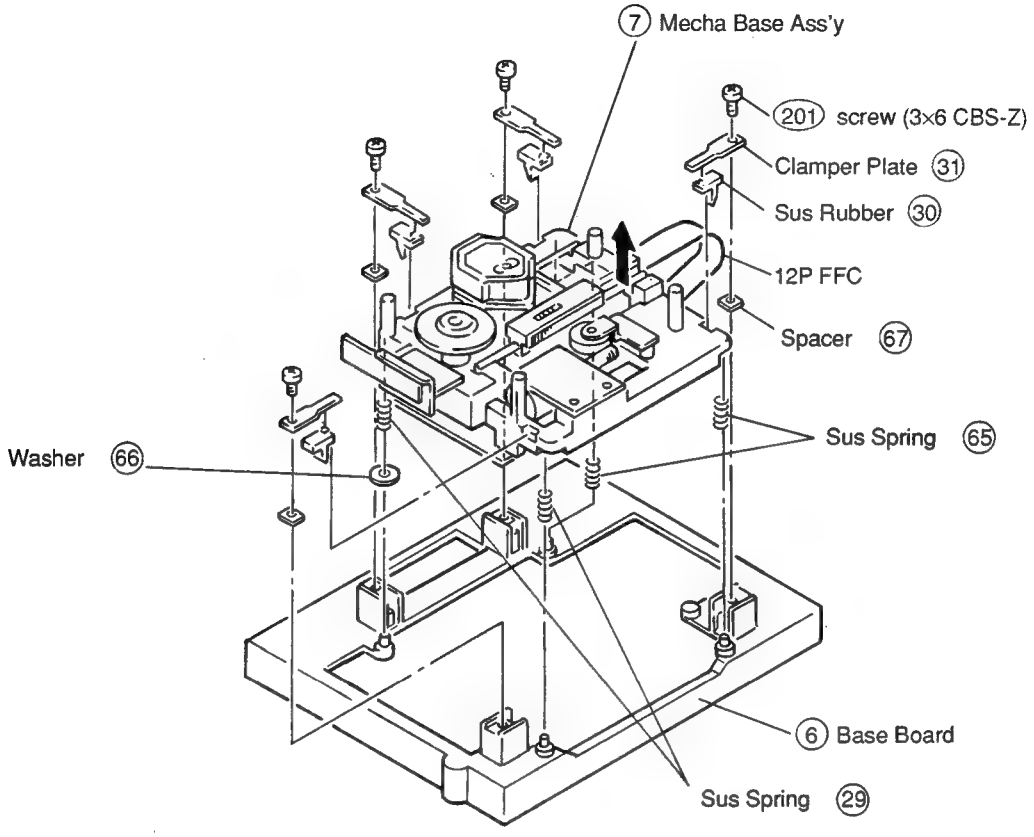

● **OPT. PICKUP**

Remove 4 screws (203) and detach the optical pick-up together with slide shafts to arrow direction.

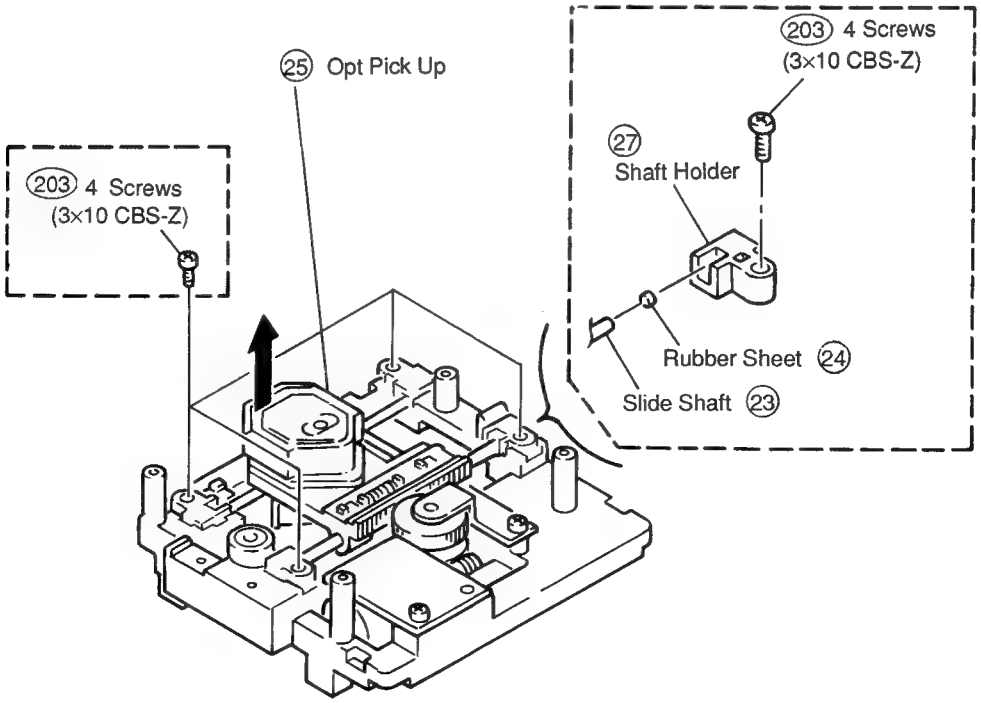

● **SLIDE MOTOR**

1. Use slide motor jig to install slide motor sub assembly to mecha.base assembly.
2. Assembling procedure
   1) Insert the shaft standing on slide motor sub assembly to the hole on mecha. base assembly.
   2) Screw the slide motor sub assembly to mecha. base assembly loosely.
   3) Place jig between worm-gear and helical-gear shaft, and adjust slide motor sub assembly so that worm-gear, jig and helical-gear shaft touch each other.
   4) Fix the screw firmly and remove the jig.

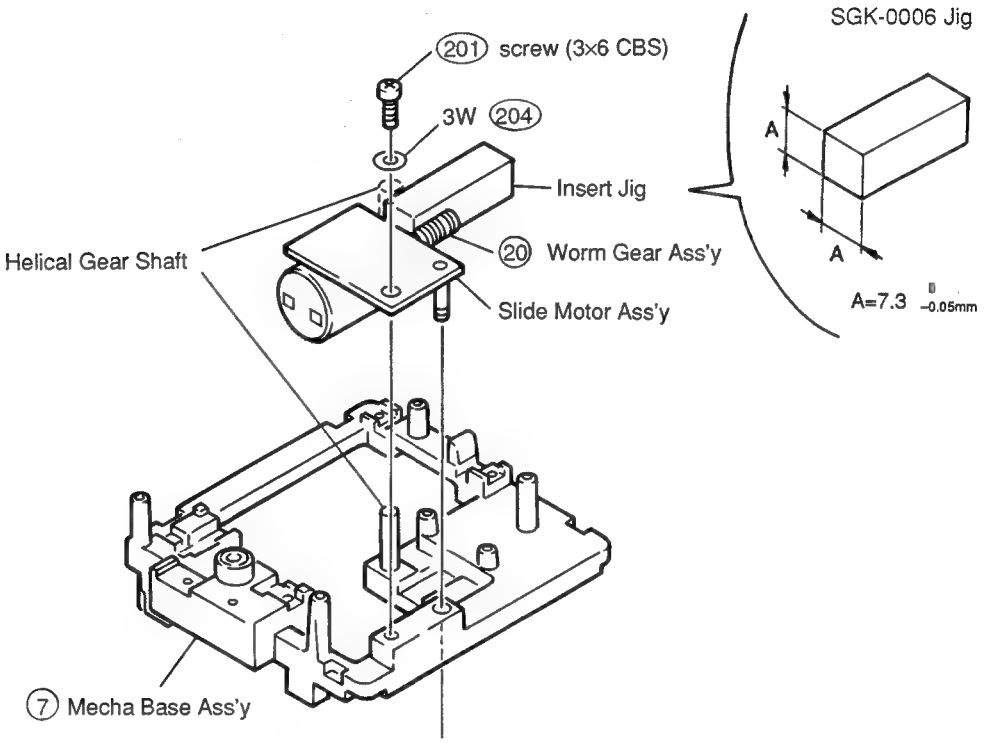

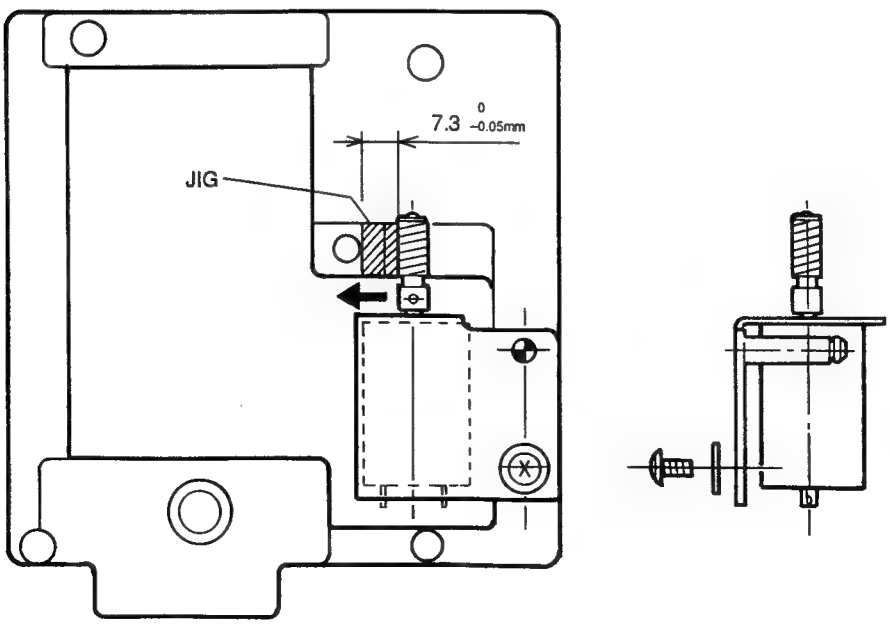

● **TO ATTACH WORM-GEAR TO SLIDE MOTOR SHAFT**

To attach Worm-Gear Ass'y to Slide-Motor shaft, insert the Jig between Worm Gear Ass'y and Motor Bracket Ass'y and fix worm-gear fixing screw so that 0.5mm gap is maintained.

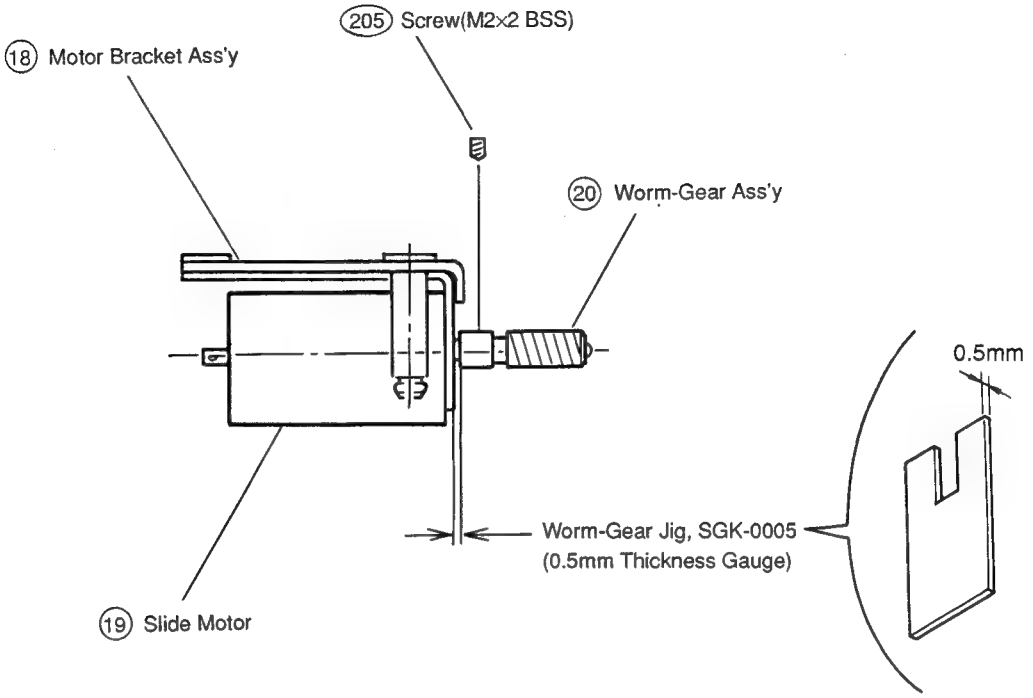

● **TURNTABLE**

Loosen 1 BSS (3×3) screw of turntable assembly,and pull the turntable assembly to arrow direction.

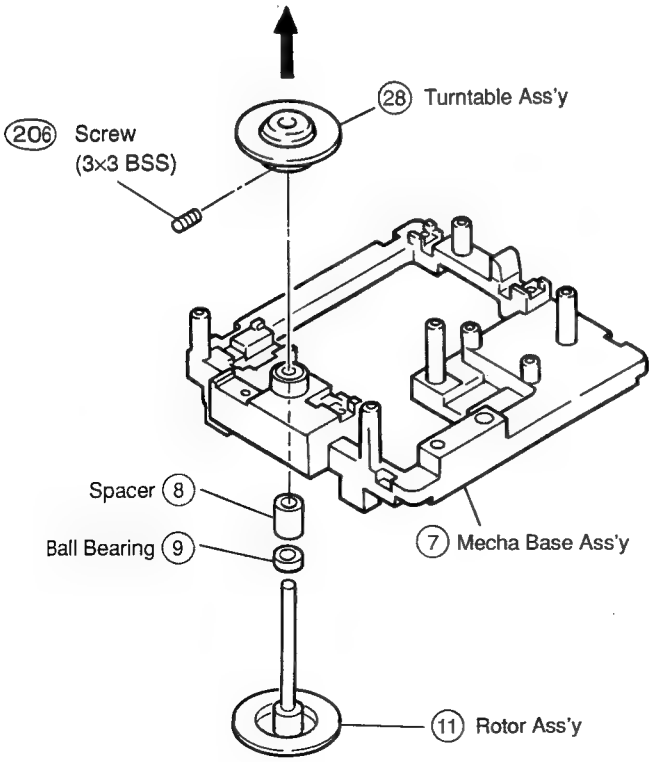

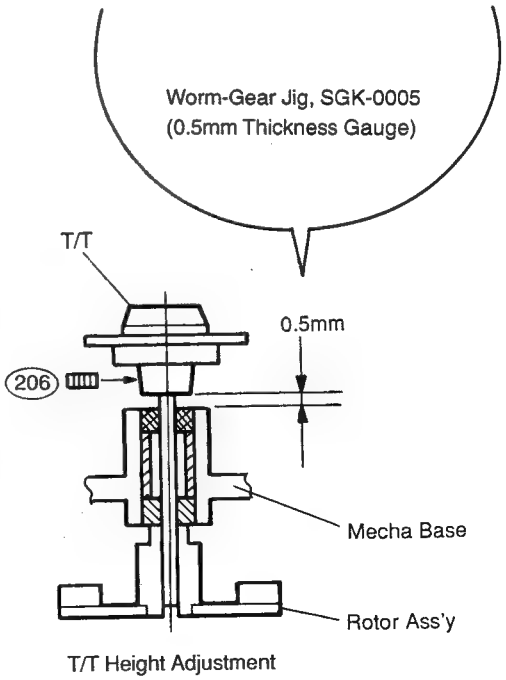

T/T Height Adjustment

● **Motor Drive Unit**

Remove a special screw, a screw, and detach the motor drive unit.

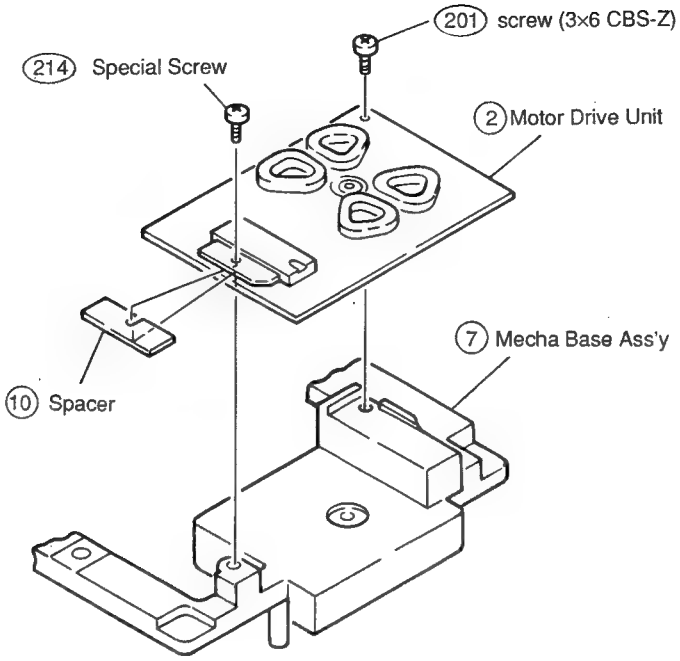

● **CONFIRMATION AND ADJUSTMENT OF SOLENOID LEVER ACTION.**

Adjust screw position to mount Solenoid, and confirm that the Solenoid returns to the original position by power of spring.

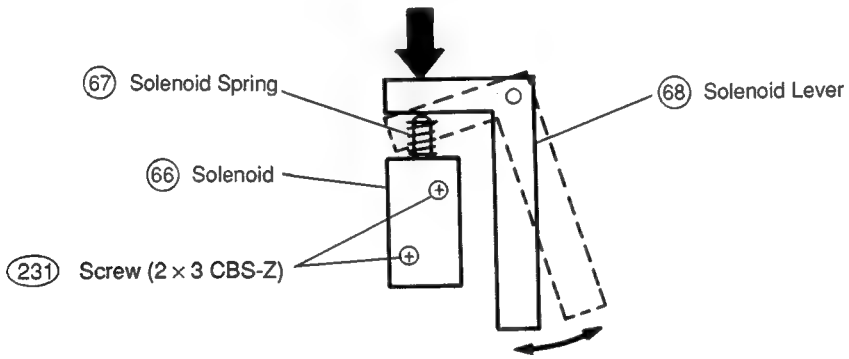

● **EJECT COLLAR**

Set in Eject collar on one side of Front Panel and secure with fixing screw.

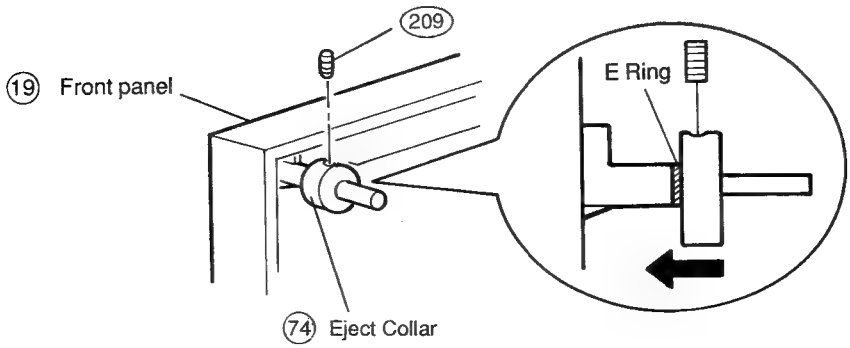

● **CLAMP ARM**

1. When mounting Clamp Arm Sub Ass'y and Clamp Arm Base on Base Board, use Inserting Jig, clamper Jig for position adjustments of Clamper and Turntable.

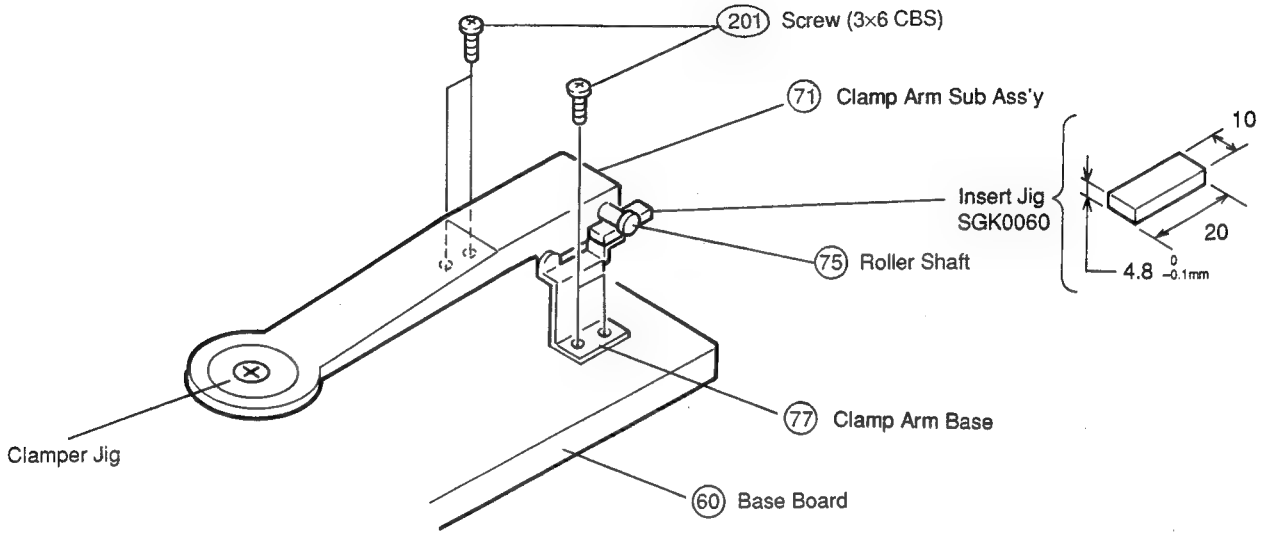

2. Assembly Procedure
   1) After mounting Clamp Arm Sub Ass'y on Clamp Arm Base, tentatively fix to Base Board.
   2) Attach Insert Jig between clamp Arm Base and Roller Shaft, and attach clamper Jig in hole portion at the end of Clamp Arm Sub Ass'y, irrespectively.

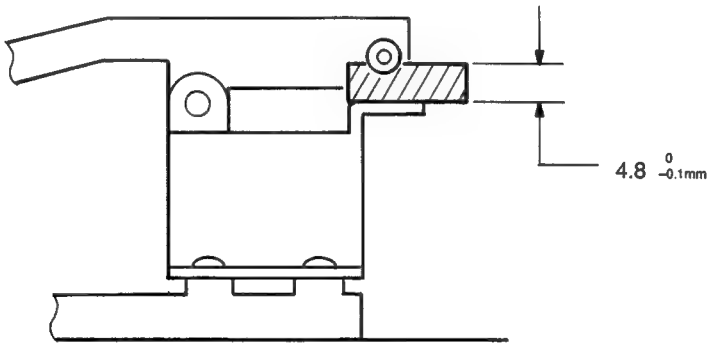

   3) Meet centers of Clamper Jig and Turntable by eye observation,secure Clamp Arm Base with fixing screw, and then remove 2 Jigs.

(Confirmation)
Confirm that Clamper and Clamper Arm do not touch when loaded disc is rotated pulling Clamper to one side.

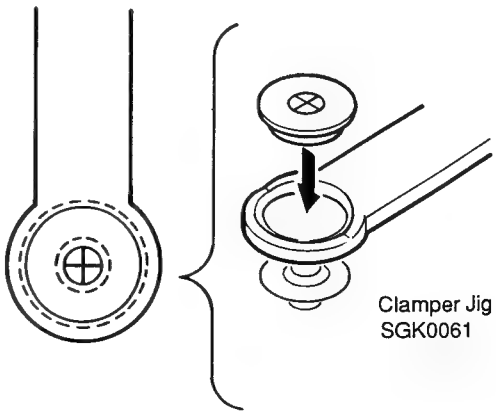

● **AUDIO UNIT**

Remove 7 screws (204) , Jack bracket and disconnect each connector wire.

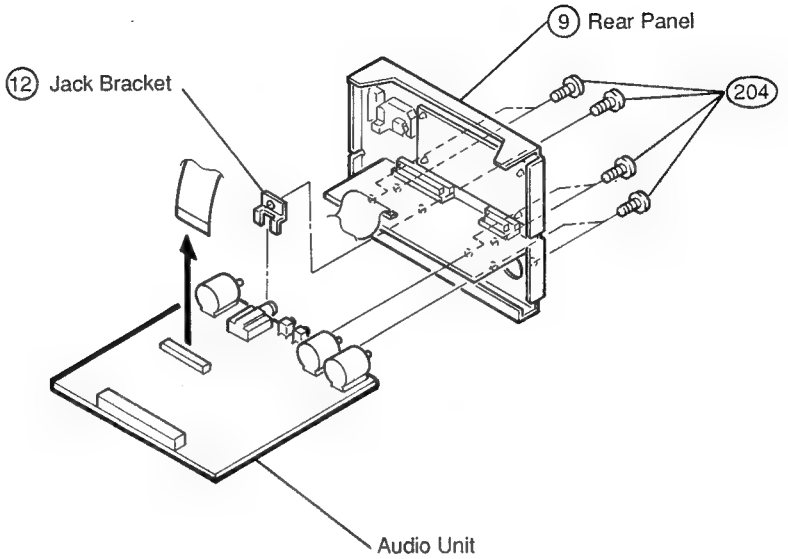

● **DC POWER UNIT**

1. Remove one screw (201) on the Side Panel L.
2. Disconnect connector wire.
3. Detach DC Power Unit from 2 places on the locking card spacer.

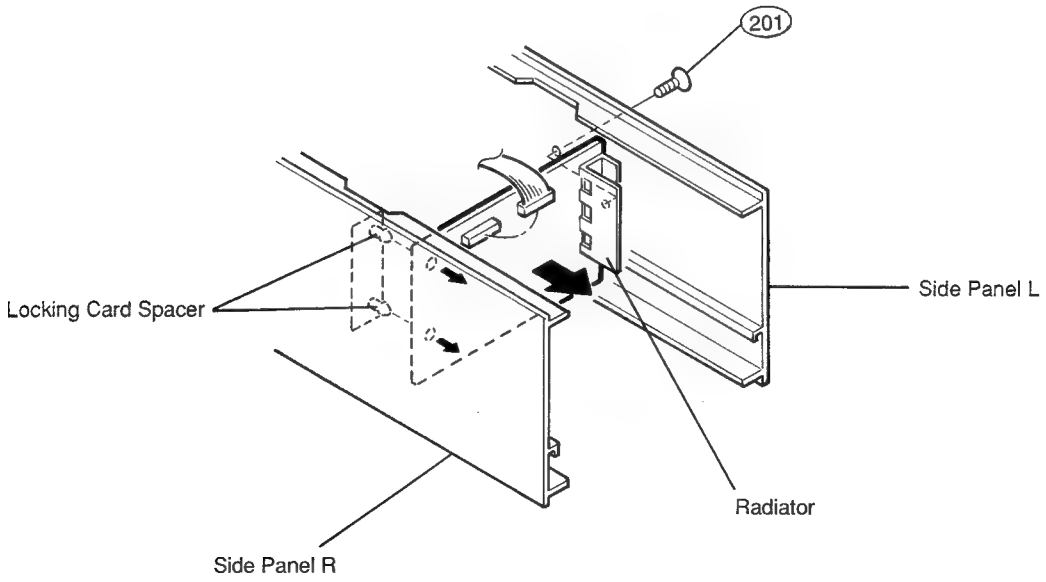

ELECTRICAL ADJUSTMENT

- **NECESSARY EQUIPMENTS FOR ADJUSTMENT**
  1. Dual trace oscilloscope
  2. Reference disc (DENON CA-1094)
  3. Oscillator (10Hz ~ 10kHz, 0 ~ 3 Vp-p)
  4. Frequency Counter
  5. Filter for measurement
  6. Adjustment Wire Connector

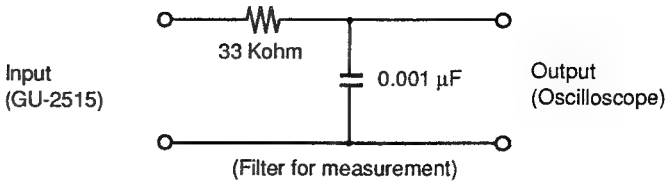

- **LOCATION**
  1. Remove 2 screws (201) and remove Front Panel.

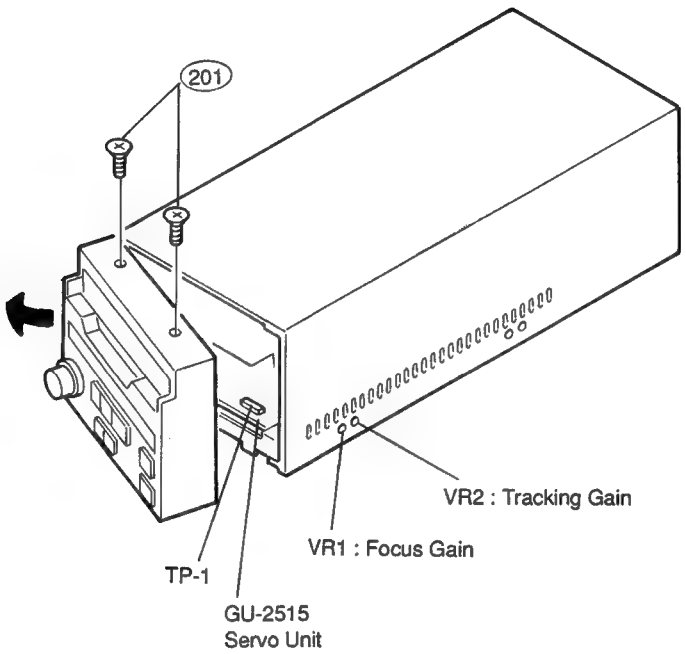

● SERVICE MODE FUNCTON

The player must remain in the SERVICE mode throughout the alignment procedure.
While in the SERVICE mode, Focus, Tracking, Servo functions can be accessed by selecting the appropriate Track Number. The Track Number is selected via the "SELECT" Knob on the front panel.

1. Setting of the Service Mode

	Operation	Display	Remarks
(1)	Turn power switch ON.	Track No. "– –" lights.	
(2)	Test mode ON.		
	1. Press the STDBY/CUE button once while holding in the INDEX and TIME buttons.	TRACK No. d1	
	2. Press the STDBY/CUE button once while holding in the INDEX and TIME buttons.	TRACK No. d2	
	3. Press the STDBY/CUE button once while holding in the INDEX and TIME buttons.	TRACK No. d3	
	4. Press the STDBY/CUE button once while holding in the INDEX and TIME buttons.	TRACK No. d4 INDEX 0	
	5. Press the SELECT knob.	TRACK No. d4 INDEX 1	
	6. Press the STDBY/CUE button once while holding in the INDEX and TIME buttons.	TRACK No. d5	
	7. Press the STDBY/CUE button once while holding in the INDEX and TIME buttons.	TRACK No. d6	
	8. Press the STDBY/CUE button once while holding in the INDEX and TIME buttons.	TRACK No. d7	
	9. Press the STDBY/CUE button once while holding in the INDEX and TIME buttons.	TRACK No. – – INDEX XX MIN XX * XX XX Displays CPU Version.	
(3)	Load Cartridge (With adjusting Disc)		
(4)	Turn Select Knob	TRACK No. "XX" blinks.	Selecting desired Function as TRACK No.
(5)	Press PLAY button	TRACK No. "XX" stays lit.	Execute test
(6)	Press STDBY/CUE	TRACK No. "00" lights.	Tracking gain Check.

Release of Test Mode

1. Eject Disc (Cartridge).
2. Perform the above step 1 ~ 5.

DISPLAY:

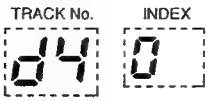

3. Perform the above steps 6 ~ 9.

DISPLAY:

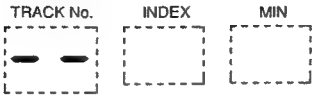

* INDEX. MIN column no display.

Returns to normal operation mode.

2. Function

Track No.	Function	Purpose of Test
01	Laser ON	
02	Focus Search	Monitoring "S" curve
03	P.U. moves inner side of disc.	
04	P.U. moves center of program area on disc.	
05	P.U. moves outer side of disc.	
06	All servo functionate	Focus Servo and Tracking Servo gain adjustments.
07	Focus Servo "ON"	Tracking Offset check
08	Prohibited to use	
09	100 lines reverse jump	
10	100 lines forward jump	
11	10 lines reverse jump	
12	10 lines forward jump	
13	One line reverse jump	
14	One line forward jump	
15	Ineer/Outer sides search	
16	Heat Run Mode	Single Track repetition mode.
17	Heat Run Mode	All Tracks repetition mode.

ADJUSTMENT

1. Confirmation of Tracking Offset

① Connections

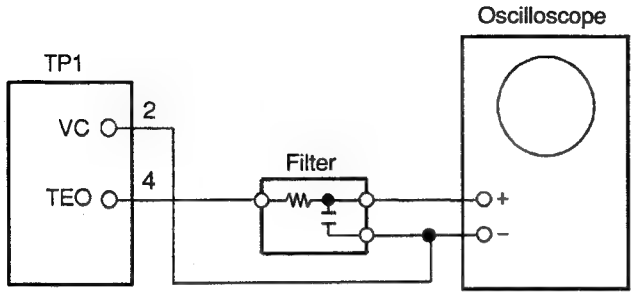

② Turn Select Knob (07 is indicated), then push the PLAY button.

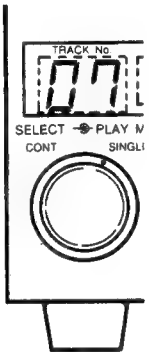

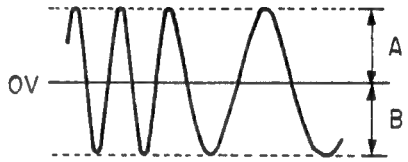

Measure the voltage of A,B and in case $\frac{|A-B|}{A+B}$ exceeds 15%, please replace pick-up as it is defected.

③ Observe TEO on the scope.

Note: In case "–" terminal of the measureing equipment is grounded, follow the connection shown under.

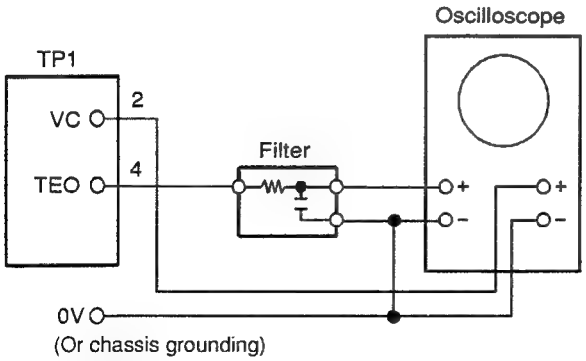

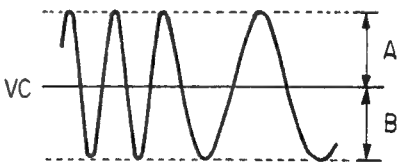

2. Adjusment of Focus Gain

① Connections

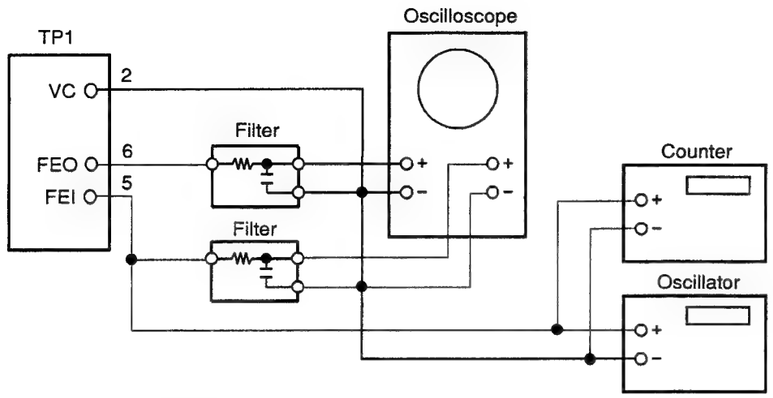

② Turn Select Knob (05 is indicated), then push the PLAY button.
③ Set the oscillator 1.1kHz, 0.6 Vp-p mode.
④ Make the oscilloscope in X-Y mode.
⑤ Adjust the VR2 (FOCUS) so as to symmetrize Lissajous figure to X axis or Y axis.

Note: In case "–" terminal of the measureing equipment is grounded, follow the connection shown under.

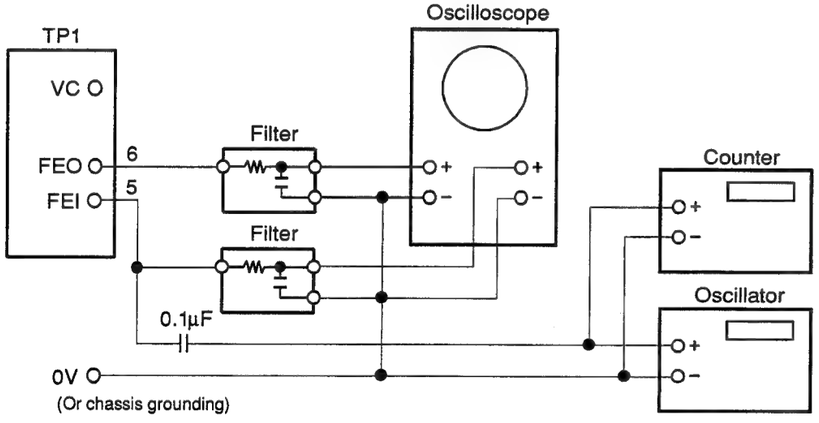

3. Adjustment of Tracking Gain

① Connections

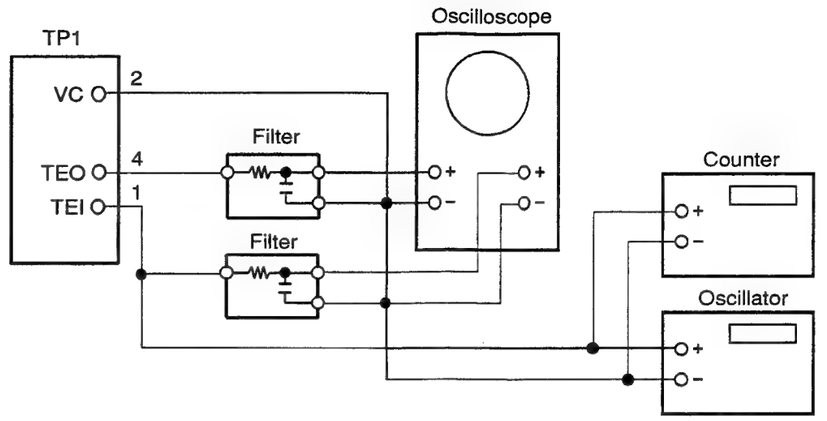

② Confirm that 05 is indicated.
③ Set the osillator 1.4kHz, 0.6Vp-p mode.
④ Make the oscilloscope in X-Y mode.
⑤ Adjust the VR1 (TRACK) so as to symmetrize Lissajous figure to X axis or Y axis.

Note: In case "–" terminal of the measuring equipment is grounded, follow the connection shown under.

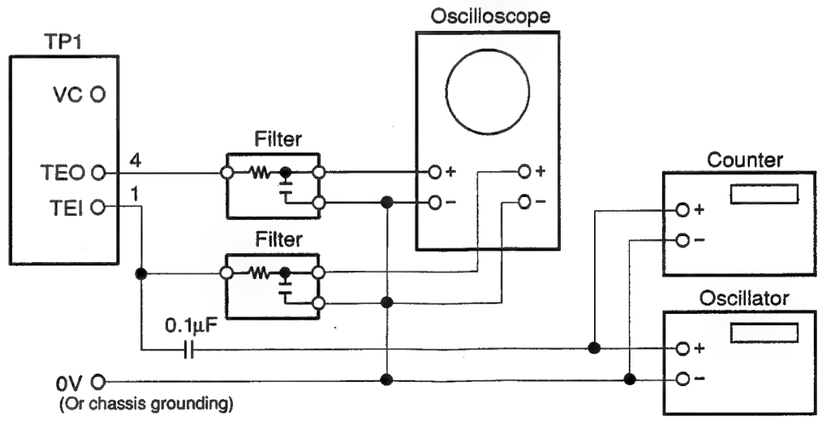

4. Confirmation of HF Waveform

① Connections

Note: In case "–" terminal of the measuring equipment is grounded, follow the connection shown under.

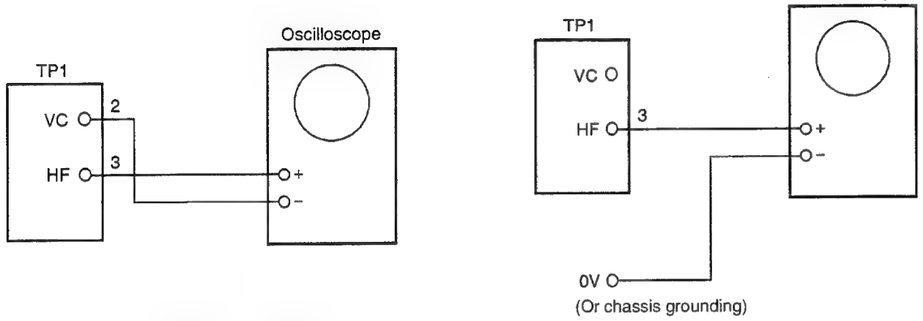

② Observe HF waveform on the scope.

③ The standard amplitude of HF waveform is 1.1V. If it is less than 0.8V, please replace pick-up as it is defected.

5. Adjustment of Super Linear Converter

Adjustment of Super Linear Converter is only performed at a time the DA Converter is replaced.

Note: For the above adjustment, DENON Audio Technical CD (38C39-7174) must be used.

Adjustment Procedure

① Connections
Connect the LINE OUT to a distortion meter through the low-pass filter.

② Playback a disc obtains 1kHz, 0dB sine wave tone.

③ Adjust the VR3, VR4 and obtain minimum THD.

VR3 . . . . . L-channel
VR4 . . . . . R-channel

THD standard is less than 0.008%

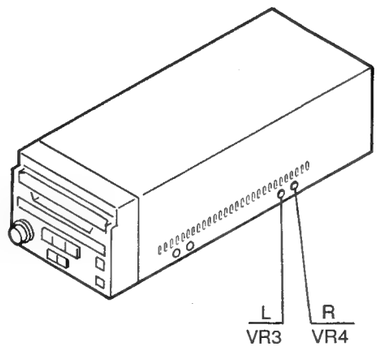

6. Output Level Adjustment

1. Connect VTVM to the output connector of DN-951FA/961FA
Use 1:1, 600-ohm Audio Transformer between the unit and VTVMs in order for matching the unbalanced input of VTVM and the active balanced output of DN-951FA/961FA.

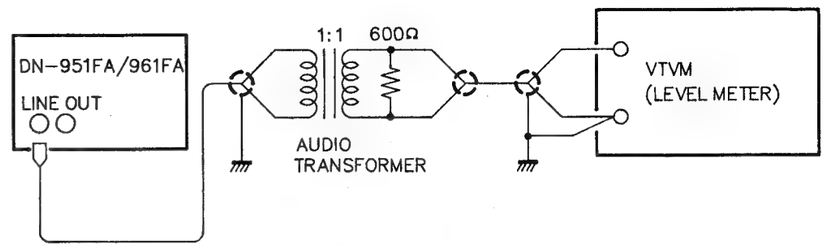

Connection for Output Level Adjustment

2. Turn the power switch on.
3. Set Track Number "49", and press PLAY/PAUSE (▶II) button.
4. While reading VTVM indication, adjust VR1 (L-ch) and VR2 (R-ch) so that the output level attains +18 dbm (or desired level).

Note: For the above adjustment, DENON Audio Technical CD (38C 39-7174) must be used.

Playback of Track Number "49" completes in a short duration. If the pick-up is moved to the next track, press STANDBY/CUE (■◀) button, then PLAY/PAUSE (▶II) button to repeat the adjustment on the Track Number "49".

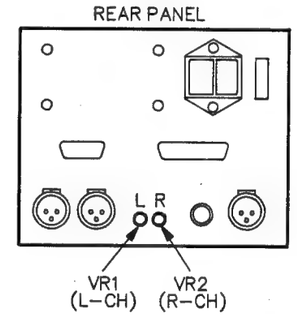

Location of Output Level Adjustment VRs

NOTE FOR PARTS LIST

- Part indicated with the mark " ◉ " are not always in stock and possibly to take a long period of time for supplying, or in some case supplying of part may be refused.
- When ordering of part, clearly indicate "1" and "I" (i) to avoid mis-supplying.
- Ordering part without stating its part number can not be supplied.
- Part indicated with the mark "★" is not illustrated in the exploded view.
- Not including Carbon Film ±5%, 1/4W Type in the P.W.Board parts list. (Refer to the Schematic Diagram for those parts.)

WARNING:

Parts marked with this symbol ⚠ ▒▒ have critical characteristics.
Use ONLY replacement parts recommended by the manufacturer.

● Resistors

Ex.: RN (Type) 14K (Shape and performance) 2E (Power) 182 (Resistance) G (Allowable error) FR (Others)

RD : Carbon RC : Composition RS : Metal oxide film RW : Winding RN : Metal film RK : Metal mixture	2B : 1/8W 2E : 1/4W 2H : 1/2W 3A : 1W 3D : 2W 3F : 3W 3H : 5W	F : ±1% G : ±2% J : ±5% K : ±10% M : ±20%	P : Pulse-resistant type NL : Low noise type NB : Non-burning type FR : Fuse-resistor F : Lead wire forming

* **Resistance**

1 8 2 ⇒ 1800 ohm = 1.8 kohm
- 2 : Indicates number of zeros after effective number.
- 1 8 : 2-digit effective number.
- • Units: ohm

1 R 2 ⇒ 1.2 ohm
- 2 : 1-digit effective number.
- 1 R : 2-digit effective number, decimal point indicated by R.
- • Units: ohm

* **Capacity (electrolyte only)**

2 2 2 ⇒ 2200μF
- 2 : Indicates number of zeros after effective number.
- 2 2 : 2-digit effective number.
- • Units : μF.

2 R 2 ⇒ 2.2μF
- 2 : 1-digit effective number.
- 2 R : 2-digit effective number, decimal point indicated by R.
- • Units : μF.

● Capacitors

Ex.: CE (Type) 04W (Shape and performance) 1H (Dielectric strength) 2R2 (Capacity) M (Allowable error) BP (Others)

CE : Aluminum foil electrolytic CA : Aluminum solid electrolytic CS : Tantalum electrolytic CQ : Film CK : Ceramic CC : Ceramic CP : Oil CM : Mica CF : Metallized CH : Metallized	0J : 6.3V 1A : 10V 1C : 16V 1E : 25V 1V : 35V 1H : 50V 2A : 100V 2B : 125V 2C : 160V 2D : 200V 2E : 250V 2H : 500V 2J : 630V	F : ±1% G : ±2% J : ±5% K : ±10% M : ±20% Z : +80% −20% P : +100% −0% C : ±0.25pF D : ±0.5pF * : Others	HS : High stability type BP : Non-polar type HR : Ripple-resistant type DL : For charge and discharge HF : For assuring high frequency U : UL part C : CSA part W : UL-CSA type F : Lead wire forming

* **Capacity (except electrolyte)**

2 2 2 ⇒ 2200μμF = 0.0022μF
- 2 : (More than 2) — Indicates number of zeros after effective number.
- 2 2 : 2-digit effective number.

• Units: μF.

2 2 1 ⇒ 220PF
- 1 : (0 or 1) — Indicates number of zeros after effective number.
- 2 2 : 2-digit effective number.

• Units: PF.

• When the dielectric strength is indicated in AC, "AC" is included after the dieelectric strength value.

PARTS LIST OF EXPLODED VIEW (DN-951FA)

Ref. No.	Part No.	Part Name	Remarks	Q'ty
◉ 1	GU-2508	AUDIO/DISPLAY UNIT		1
1-1		AUDIO UNIT		
1-2		FILTER UNIT		
1-3		DC POWER UNIT		
1-4		REMOTE UNIT		
1-5		DISPLAY DRIVE UNIT		
1-6		DISPLAY UNIT		
1-7		SELECTOR UNIT		
2	FG 952	CD MECHA. UNIT		1
⚠ 3	233 5992 001	POWER TRANS	U.S.A., Canada and Asia (Multi-Voltage) Models	1
◉ 4	441 1467 209	SIDE PANEL (L)		1
◉ 5	441 1468 305	SIDE PANEL (R)		1
◉ 7	105 1071 003	BOTTOM COVER		1
8	104 0159 004	FOOT		4
◉ 9	105 1066 102	REAR PANEL		1
⚠ 10	212 4695 001	POWER SWITCH	SI	1
⚠ 11	203 3935 001	AC INLET	CN1	1
◉ 12	412 2285 107	JACK BRACKET		1
◉ 13	449 0074 024	LOCKING CARD SPACER		4
14	009 0079 012	21P FFC		1
15	412 3582 003	PWB BRACKET		1
◉ 16	449 0074 037	LOCKING CARD SPACER		2
◉ 17	417 0353 007	RADIATOR		1
◉ 18	412 3581 004	FRONT BRACKET		1
◉ 19	103 1575 008	FRONT PANEL ASS'Y		1
◉ 20	103 1577 006	KNOB FRAME (A)		1
21	113 1349 105	PUSH KNOB		5
◉ 22	463 0531 000	KNOB SPRING		5
23	103 1578 005	KNOB FRAME (B)		1
25	112 0593 108	SELECT KNOB (B)		1
26	112 0592 109	SELECT KNOB (A)		1
27	009 0079 009	21P FFC		1
◉ 28	105 1072 109	TOP COVER		1
◉ 30	415 0692 005	EARTH SHEET (A)		1
◉ 31	415 0693 004	EARTH SHEET (B)		1
32	415 0694 003	INSU. SHEET		1
◉ 33	414 0678 013	TRANS PLATE		1
◉ 34	412 3649 001	TRANS BRACKET		2
SCREWS AND NUTS				
201	471 2304 058	SCREW 3×8	NIP	14
202	473 7500 015	TAPPING SCREW 3×8 (P)		5
203	471 2303 017	SCREW 3×6		4
204	473 7015 018	TAPPING SCREW 3×8 (S)	Black	13
205	473 7003 020	TAPPING SCREW 3×6 (S)	Black	2
206	473 7002 018	TAPPING SCREW 3×8 (S)		1
207	471 3410 019	SCREW 4×20		2
208	470 0017 001	SCREW 4×6 SW		1
209	474 4200 010	SCREW 3×3BSS		2

WARNING :

- Parts marked with "⚠"and/shading have special characteristics important to safety Be sure to use the specified parts for replacement.
- Part indicated with the mark " ◉ " are not always in stock and possibly to take a long period of time for suppluing, or in some case supplying of parts may be refused

PACKING & ACCESSORIES (DN-951FA)

Ref. No.	Part No.	Part Name	Remarks	Q'ty
301	503 1052 006	CUSHION ASS'Y		1
302	505 0102 089	STYRENE PAPER		1
303	146 1005 012	CD CARTRIDGE PACK		1
304	505 0061 010	ENVELOPE		1
305	511 2401 000	INST. MANUAL		1
306	515 0468 005	DAI WARRANTY		1
308	505 8017 024	ENVELOPE		1
309	206 2059 000	3P AC CORD SET		1
310	505 8006 006	ENVELOPE		1
311	206 1039 034	FUSE 1A		1
312	501 1527 247	CARTON CASE		1
313	513 1349 004	TERMINAL CARBON FILM		1

WARNING :

- Parts marked with "⚠"and/shading have special characteristics important to safety Be sure to use the specified parts for replacement.

EXPLODED VIEW (DN-951FA)

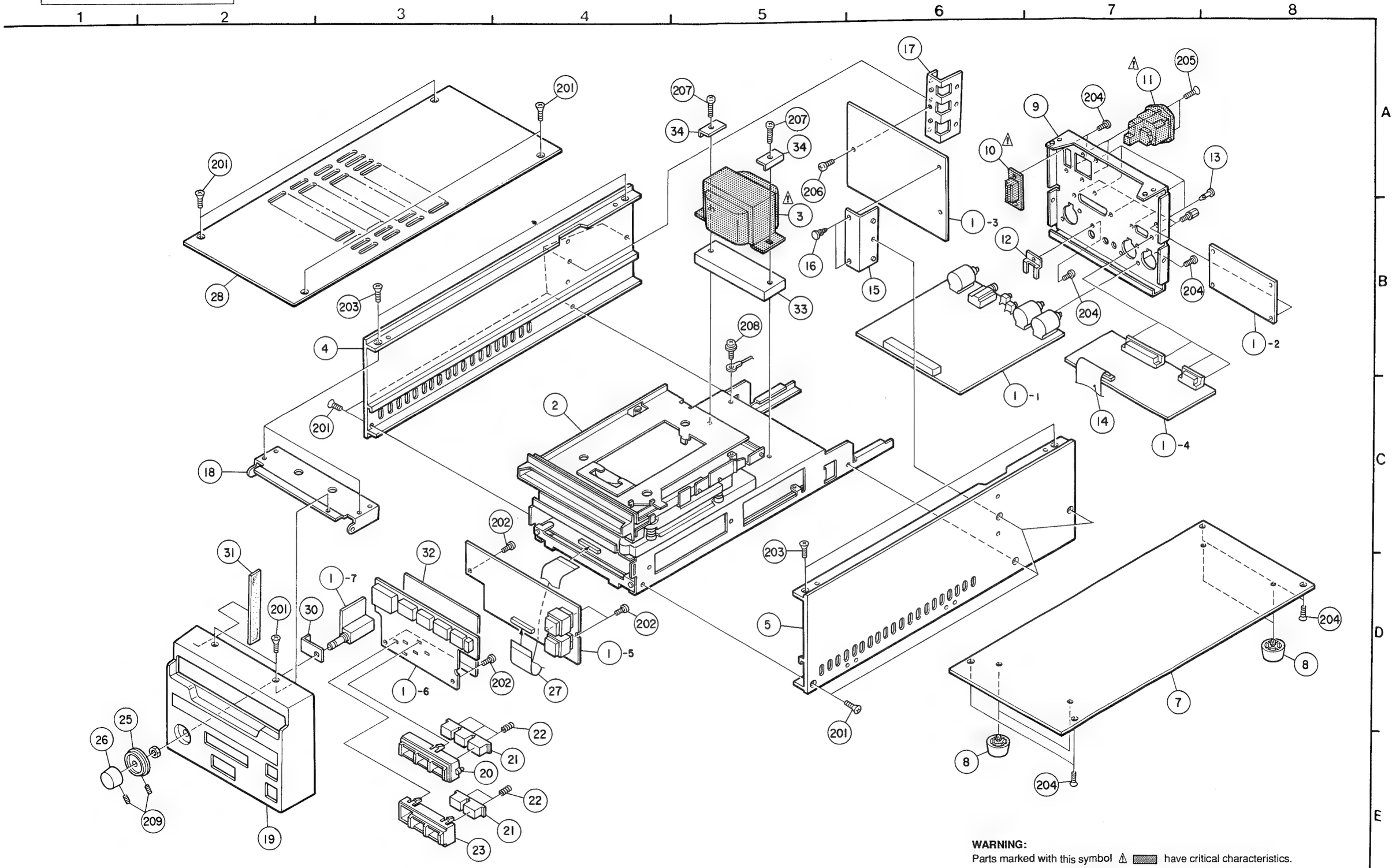

WARNING:
Parts marked with this symbol ⚠ ▨ have critical characteristics.
Use ONLY replacement parts recommended by the manufacturer.

EXPLODED VIEW (DN-961FA)

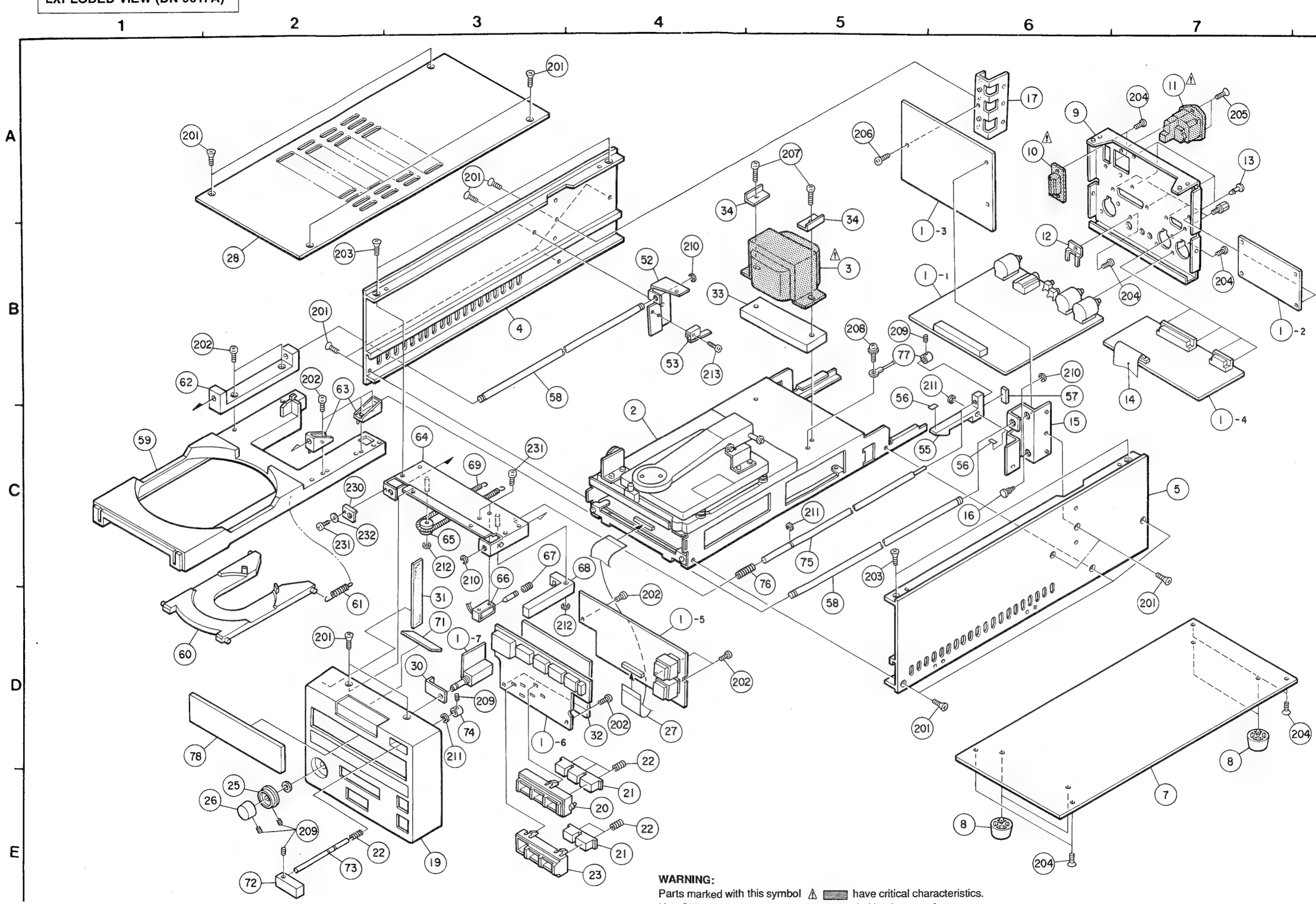

PARTS LIST OF EXPLODED VIEW (DN-961FA)

Ref No.	Part No.	Part Name	Remarks	Q'ty
◉ 1	GU-2508	AUDIO/DISPLAY UNIT		1
1-1		AUDIO UNIT		
1-2		FILTER UNIT		
1-3		DC POWER UNIT		
1-4		REMOTE UNIT		
1-5		DISPLAY DRIVE UNIT		
1-6		DISPLAY UNIT		
1-7		SELECTOR UNIT		
2	FG 961	CD MECHA. UNIT		1
⚠ 3	233 5992 001	POWER TRANS	U.S.A., Canada and Asia (Multi-Voltage) Models	1
◉ 4	441 1483 209	SIDE PANEL (L)		1
◉ 5	441 1484 208	SIDE PANEL (R)		1
◉ 7	105 1071 003	BOTTOM COVER		1
8	104 0159 004	FOOT		4
◉ 9	105 1066 115	REAR PANEL		1
⚠ 10	212 4695 001	POWER SWITCH	S1	1
⚠ 11	203 3935 001	AC INLET	CN1	1
◉ 12	412 2285 107	JACK BRACKET		1
◉ 13	449 0074 024	LOCKING CARD SPACER		4
14	009 0079 012	21P FFC		1
15	412 3614 201	PWB BRACKET ASS'Y		1
◉ 16	449 0074 037	LOCKING CARD SPACER		2
◉ 17	417 0353 007	RADIATOR		1
◉ 19	103 1590 201	FRONT PANEL ASS'Y		1
20	103 1577 006	KNOB FRAME (A)		1
21	113 1349 105	PUSH KNOB		5
◉ 22	463 0531 000	KNOB SPRING		6
23	103 1578 005	KNOB FRAME (B)		1
25	112 0593 108	SELECT KNOB (B)		1
26	112 0592 109	SELECT KNOB (A)		1
27	009 0079 009	21P FFC		1
◉ 28	105 1072 109	TOP COVER		1
◉ 30	415 0692 005	EARTH SHEET (A)		1
◉ 31	415 0693 004	EARTH SHEET (B)		1
32	415 0694 003	INSU. SHEET		1
◉ 33	414 0678 013	TRANS PLATE		1
◉ 34	412 3649 001	TRANS BRACKET		2
◉ 52	412 3606 109	RAIL SUPPORT		1
◉ 53	GU-2515 A-4	SWITCH UNIT		1
◉ 55	433 0583 002	STOP LEVER		1
◉ 56	461 0776 005	HIMERON SHEET		2
◉ 57	461 0777 004	CUSHION		1
58	443 1234 001	RAIL SHAFT		2
59	431 0332 202	LOADER FRAME		1
60	431 0333 201	DISC TRAY		1
61	463 0732 003	TRAY SPRING		1
62	433 0585 000	RAIL SLIDER (L)		1
63	433 0582 100	RAIL SLIDER (R)		2
64	412 3613 202	F. FRAME ASS'Y		1
65	421 0635 009	SPRING ROLLER		1
66	214 0165 007	SOLENOID		1
◉ 67	463 0604 102	SOLENOID SPRING		1
◉ 68	433 0584 108	SOLENOID LEVER		1
◉ 69	463 0597 109	LOADER SPRING		1
71	146 1442 002	MIRROR SHEET		1
72	113 1583 000	EJECT KNOB		1
73	431 0335 005	EJECT SHAFT		1
74	431 0341 002	EJECT COLLAR		1
75	431 0334 006	EJECT ROD		1
76	463 0733 002	EJECT ROD SPRING		1
77	443 1248 000	STOPPER RING		1
78	146 1439 002	LOADER PANEL		1
SCREWS AND NUTS				
201	471 2304 058	SCREW 3×8	NIP	14
202	473 7500 015	TAPPING SCREW 3×8 (P)		10
203	471 2303 017	SCREW 3×6		4
204	473 7015 018	TAPPING SCREW 3×8 (S)	Black	13
205	473 7003 020	TAPPING SCREW 3×6 (S)	Black	2
206	473 7002 018	TAPPING SCREW 3×8 (S)		1
207	471 3410 019	SCREW 4×20		2
208	470 0017 001	SCREW 4×6 SW		1
209	474 4200 010	SCREW 3×3 BSS		5
210	476 1004 008	4E RING		4
211	476 1003 009	3E RING		3
212	476 1001 001	2E RING		2
213	471 3204 018	SCREW 2.6×8		1
230	412 3673 006	ADJ. PLATE		1
231	471 3801 039	SCREW 2×3		3
232	475 1000 009	WASHER		1

WARNING :

- Parts marked with "⚠" and/shading have special characteristics imporant to safety. Be sure to use the specified parts for replacement.
- (Gold) in Remarks column refers with gold front panels.
- Part indicated with the mark " ◉ " are not always in stock and possibly to take a long period of time for supplying, or in some case supplying of parts may berefused.

PACKING & ACCESSORIES (DN-961FA)

Ref No.	Part No.	Part Name	Remarks	Q'ty
	503 1052 006	CUSHION ASS'Y		1
	505 0102 089	STYRENE PAPER		1
	505 0061 010	ENVELOPE		1
	511 2435 005	INST. MANUAL		1
	515 0626 009	DAI WARRANTY COM.		1
	505 8017 024	ENVELOPE		1
	206 2059 000	3P AC CORD SET		1
	505 8006 006	ENVELOPE		1
	206 1039 034	FUSE 1A		1
	501 1527 250	CARTON CASE		1
	513 1349 004	TERMINAL CARBON FILM		1
	504 0126 004	LOADER PANEL GUARD		1

WARNING :

- Parts marked with "⚠" and/shading have special characteristics important to safety. Be sure to use the specified parts for replacement.

PARTS LIST OF FG-952 MECHA UNIT (DN-951FA)

Ref No.	Part No.	Part Name	Remarks	Q'ty
◉ 1	GU-2515	SERVO/CPU UNIT		1
1-1		SERVO UNIT		
1-2		P.DETECTOR UNIT		
1-3		INTERRUPTER UNIT		
◉ 2	3U-1392	MOTOR DRIVE UNIT		1
◉ 3	411 1198 302	MECHA. CHASSIS		1
◉ 4	412 3584 001	HOOK BRACKET		1
◉ 5	421 0526 008	ROTOR BOSS		1
6	443 1224 105	BASE BOARD		1
7	443 1219 107	MECHA. BASE ASS'Y		1
◉ 8	443 1220 002	SPACER		1
9	425 0189 013	BALL BEARING		1
◉ 10	415 0422 000	SPACER		1
11	GEN 0105	ROTOR ASS'Y		1
◉ 12	412 2916 007	SENSOR BRACKET ASS'Y		1
◉ 13	412 2918 005	SENSOR PLATE		1
◉ 14	412 2773 101	SWITCH PLATE		1
15	212 4650 004	LEAF SW.		1
16	424 0138 000	HELICAL GEAR		1
17	477 0092 001	WASHER		2
◉ 18	412 2964 101	MOTOR BRACKET ASS'Y		1
19	217 0151 007	SLIDE MOTOR		1
20	424 0135 003	WORM GEAR ASS'Y		1
◉ 21	412 2626 009	GEAR STOPPER		1
22	461 0457 104	PLATE SPRING		1
23	431 0224 103	SLIDE SHAFT (M)		2
24	461 0466 001	RUBBER SHEET		4
25	499 0191 009	OPTICAL PU (KSS-240A)		1
26	009 0051 001	12P. FFC		1
27	443 0912 007	SHAFT HOLDER		4
28	GEN 2194	T. TABLE SUB ASS'Y		1
29	468 0448 009	SUS SPRING		4
30	461 0398 108	SUS RUBBER		4
31	412 2256 204	CLAMPER PLATE		4
	GEN 2195	LOADING SUB ASS'Y	LOADING SET	1
◉ 32	412 3576 006	LM BRACKET TK		1
33	441 0865 200	DMP LEVER ASS'Y		1
◉ 34	441 0866 005	DMP PLATE		1
35	477 0274 007	WASHER		1
36	443 1222 000	HINGE PIN		1
37	412 3577 005	DISC HOLDER TK		1
38	463 0686 007	LEVER SPRING		1
39	443 0706 200	EJECT LEVER		1
40	443 0573 103	STOPPER		1
41	463 0555 109	LEVER SPRING		1
42	463 0469 004	LM SPRING		2
43	412 2274 202	SLIDE PLATE ASS'Y		1
44	463 0545 009	SLIDE SPRING		1
45	433 0580 005	STOPPER ARM ASS'Y		1
46	463 0632 006	SPRING		1
47	433 0579 003	CARTRIDGE GUIDE TK		1
◉ 48	412 3579 003	LM PANEL		1
49	412 3580 102	SENSOR PLATE		1
◉ 50	449 0059 007	CABLE CLAMPER		1
◉ 51	461 0558 003	PW CUSHION		4
◉ 52	445 0067 013	CORD KEEP		2
53	461 0772 009	STOPPER CUSHION		1

Ref No.	Part No.	Part Name	Remarks	Q'ty
SCREWS AND NUTS				
201	471 3303 016	SCREW 3×6		17
202	473 7015 018	TAPPING SCREW 3×8 (S)		2
203	471 3305 014	SCREW 3×10		4
204	475 1106 042	WASHER		2
205	474 4310 007	SCREW 2×2.5 BSS		1
206	474 4200 010	SCREW 3×3 BSS		3
207	476 1001 001	2E RING		4
208	471 3802 012	SCREW 2.6×3		5
209	471 2303 017	SCREW 3×6		2
210	473 7500 015	TAPPING SCREW 3×8 (P)		3
211	471 3301 021	SCREW 3×4	Black	6
212	471 3101 014	SCREW 2×4		5
213	471 9013 012	CAMERA SCREW 1.7×6		1
214	477 0010 122	SPECIAL SCREW		1

● Part indicated with the mark " ◉ " are not always in stock and possibly to take a long perlok of time for supplying, or in some case supplying of parts may be refused.

EXPLODED VIEW OF FG-952 MECHANISM UNIT (DN-951FA)

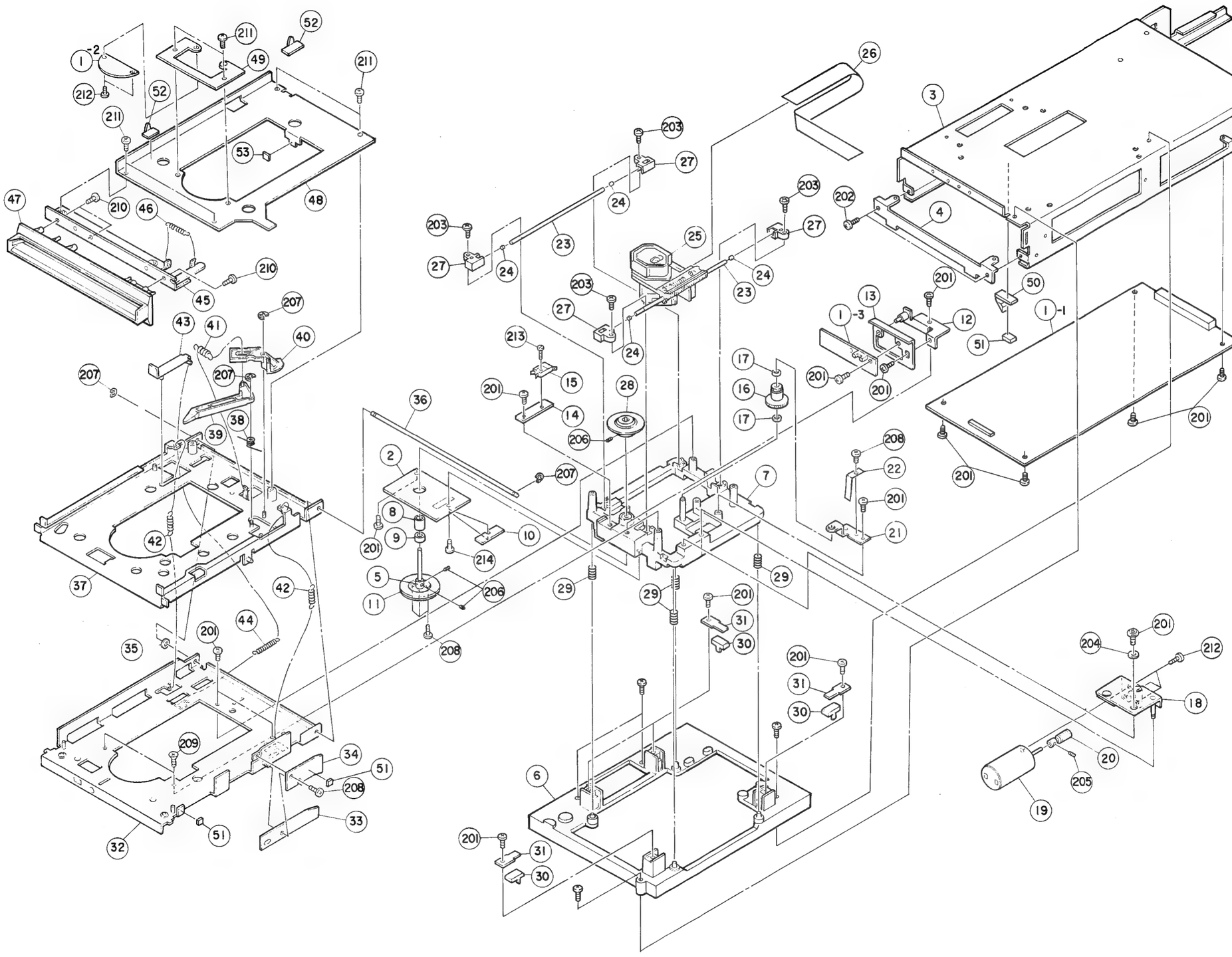

EXPLODED VIEW OF FG-961 MECHANISM UNIT (DN-961FA)

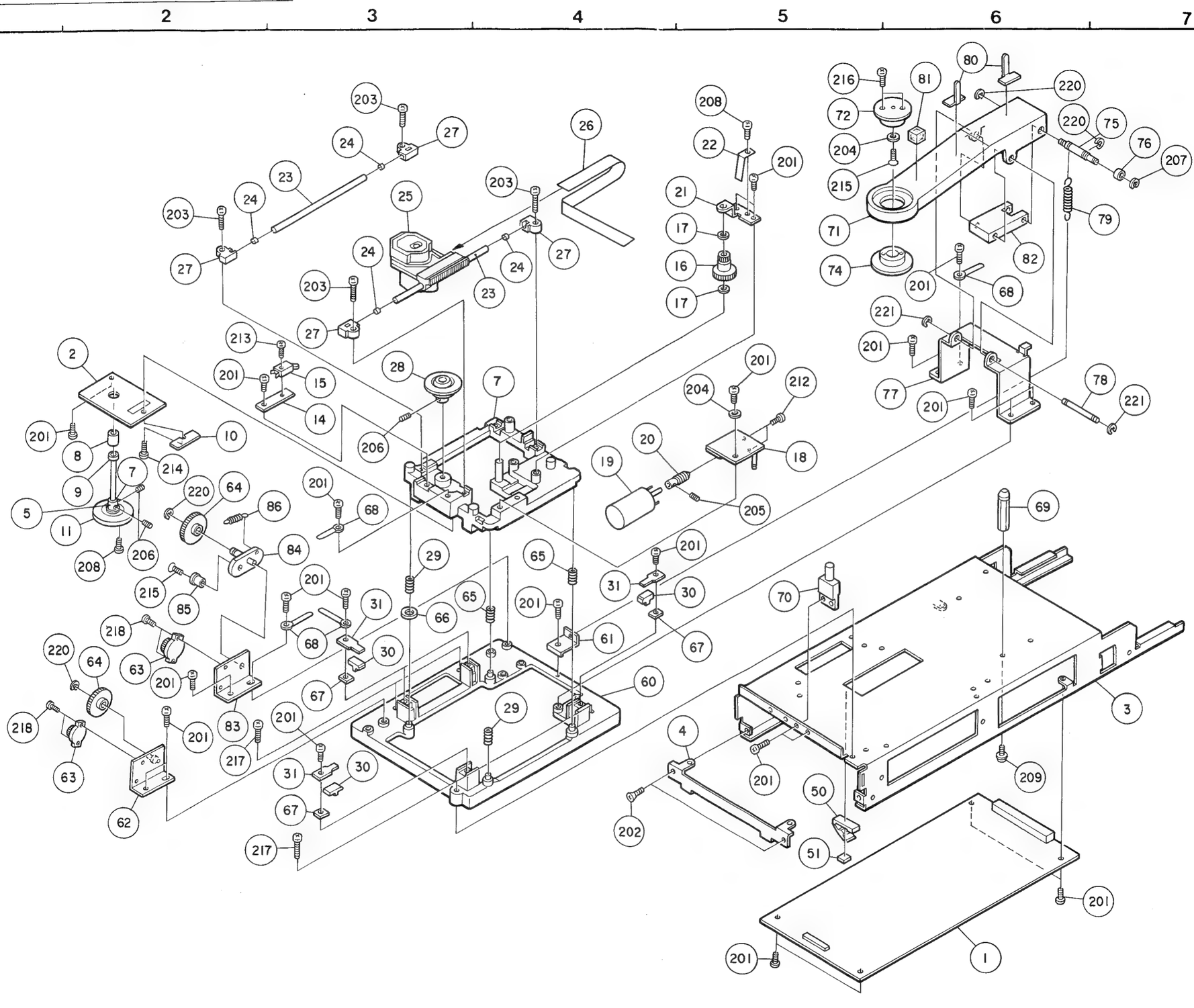

PARTS LIST OF FG-961 MECHA UNIT (DN-961FA)

Ref No.	Part No.	Part Name	Remarks	Q'ty
◉ 1	GU-2515 A	SERVO/CPU UNIT		1
◉ 2	3U-1392	MOTOR DRIVE UNIT		1
◉ 3	411 1198 302	MECHA. CHASSIS		1
◉ 4	412 3584 001	HOOK BRACKET		1
◉ 5	421 0526 008	ROTOR BOSS		1
◉ 7	443 1219 000	MECHA. BASE ASS'Y		1
◉ 8	443 1220 002	SPACER		1
9	425 0186 013	BALL BEARING		1
◉ 10	415 0422 000	SPACER		1
11	GEN 0105	ROTOR ASS'Y		1
◉ 14	412 2773 101	SWITCH PLATE		1
15	212 4650 004	LEAF SW.		1
16	424 0138 000	HELICAL GEAR		1
17	477 0092 001	WASHER		2
◉ 18	412 2964 101	MOTOR BRACKET ASS'Y		1
19	217 0151 007	SLIDE MOTOR		1
20	424 0135 003	WORM GEAR ASS'Y		1
◉ 21	412 2626 009	GEAR STOPPER		1
22	461 0457 104	PLATE SPRING		1
23	431 0224 103	SLIDE SHAFT (M)		2
◉ 24	461 0466 001	RUBBER SHEET		4
25	499 0191 009	OPTICAL PU (KSS-240A)		1
26	009 0051 001	12P. FFC		1
◉ 27	443 0912 007	SHAFT HOLDER		4
28	GEN 2194	T.TABLE SUB ASS'Y		1
29	463 0448 009	SUS SPRING		4
30	461 0398 108	SUS RUBBER		4
31	412 2256 204	CLAMPER PLATE		4
50	449 0059 007	CABLE CLAMPER		1
◉ 51	461 0558 003	PW CUSHION		1
60	443 1224 118	BASE BOARD		1
61	412 3610 001	SPRING HOOK		1
◉ 62	412 3654 106	DAMPER BRACKET ASS'Y		1
63	421 0505 033	MINI DAMPER		1
64	424 0191 005	GEAR		1
65	463 0596 003	SUS SPRING		2
66	477 0265 061	WASHER		1
◉ 67	412 3656 007	SPACER		4
68	445 8028 009	CORD HOLDER		4
◉ 69	443 1246 002	GUIDE STAND		1
◉ 70	412 3611 107	STOPPER ASS'Y		1
71	433 0581 208	CLAMP ARM		1
72	421 0636 008	CLAMPER (A)		1
74	421 0528 103	CLAMPER		1
75	443 1241 007	ROLLER SHAFT		1
76	431 0342 001	ROLLER		1
77	412 3609 106	CLAMP ARM BASE		1
78	443 1236 009	CLAMPER SHAFT		1
79	463 0734 001	CLAMPER SPRING		1
80	445 0067 013	CORD KEEP		2
◉ 81	461 0778 003	ARM CUSHION		1
◉ 82	433 0589 006	ARM PLATE		1
◉ 83	412 3655 105	DAMPER BRACKET		1
◉ 84	433 0591 007	GEAR HOLDER		1
◉ 85	443 1252 009	COLLAR		1
86	463 8231 108	SPRING		1

Ref No.	Part No.	Part Name	Remarks	Q'ty
SCREWS AND NUTS				
201	471 3303 016	SCREW 3×6		24
202	473 7015 018	TAPPING SCREW 3×8 (S)	Black	2
203	471 3305 014	SCREW 3×10		4
204	475 1106 042	WASHER		2
205	474 4310 007	SCREW 2×2.5 BSS		1
206	474 4200 010	SCREW 3×3 BSS		3
207	476 1001 001	2E RING		1
208	471 3802 012	SCREW 2.6×3		4
209	471 3404 012	SCREW 4×8		1
212	471 3101 014	SCREW 2×4 CBS		3
213	471 9013 012	CAMERA SCREW 1.7×6		1
214	477 0010 122	SPECIAL SCREW		1
215	471 2102 014	SCREW 2×5		2
216	471 3104 011	SCREW 2×8		2
217	473 7005 031	TAPPING SCREW 3×16 (S)		4
218	471 1101 016	SCREW 2×4 CPS		4
220	476 1004 008	4E RING		4
221	476 1003 009	3E RING		2

● Part indicated with the mark " ◉ " are not always in stock and possibly to take a long period of time for supplying, or in some case supplying of parts may be refused.

P.W.BOARD & WIRING DIAGRAM (DISPLAY SECTION)

(BOTTOM VIEW)

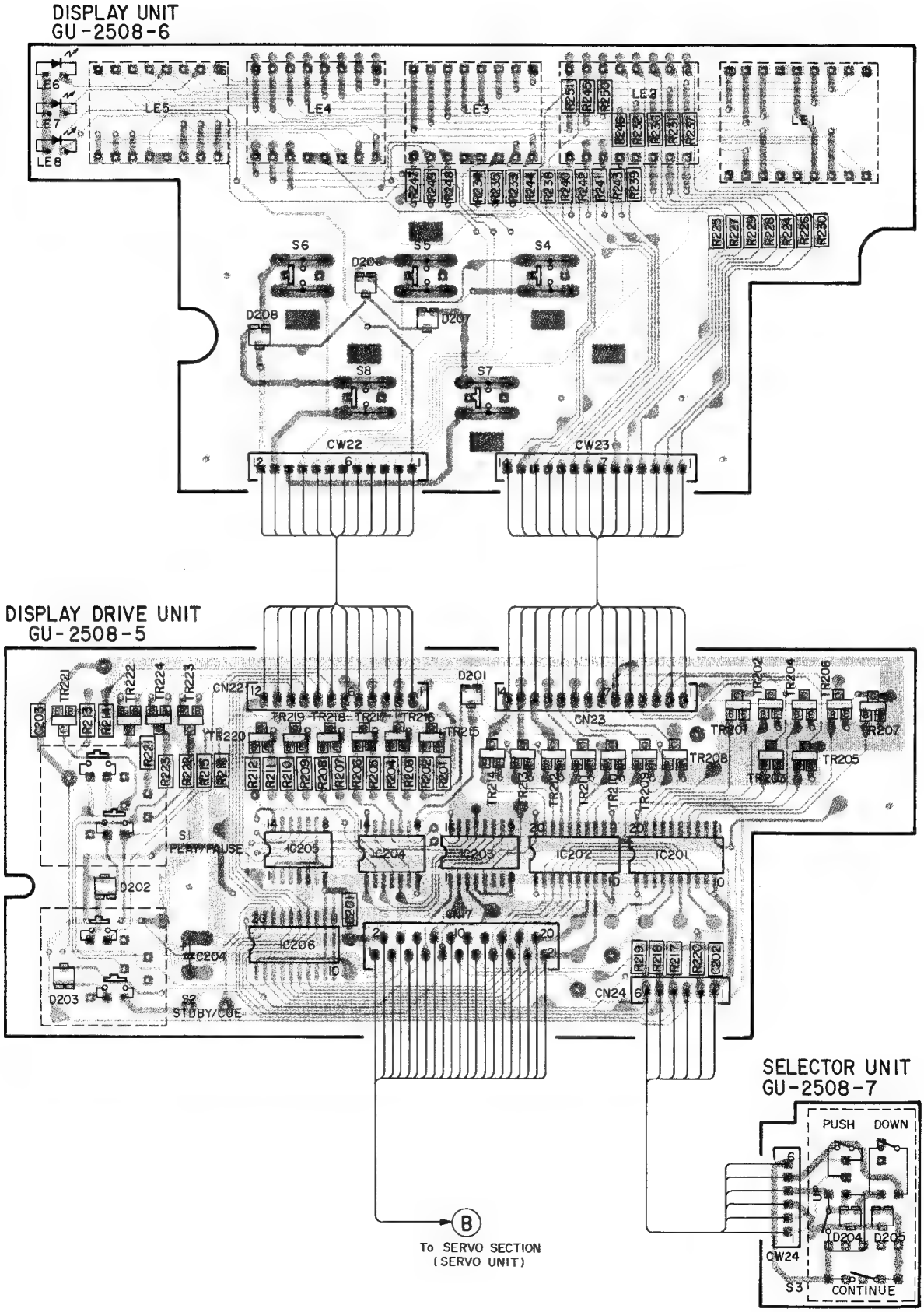

P.W.BOARD & WIRING DIAGRAM (SERVO SECTION)

(BOTTOM VIEW)

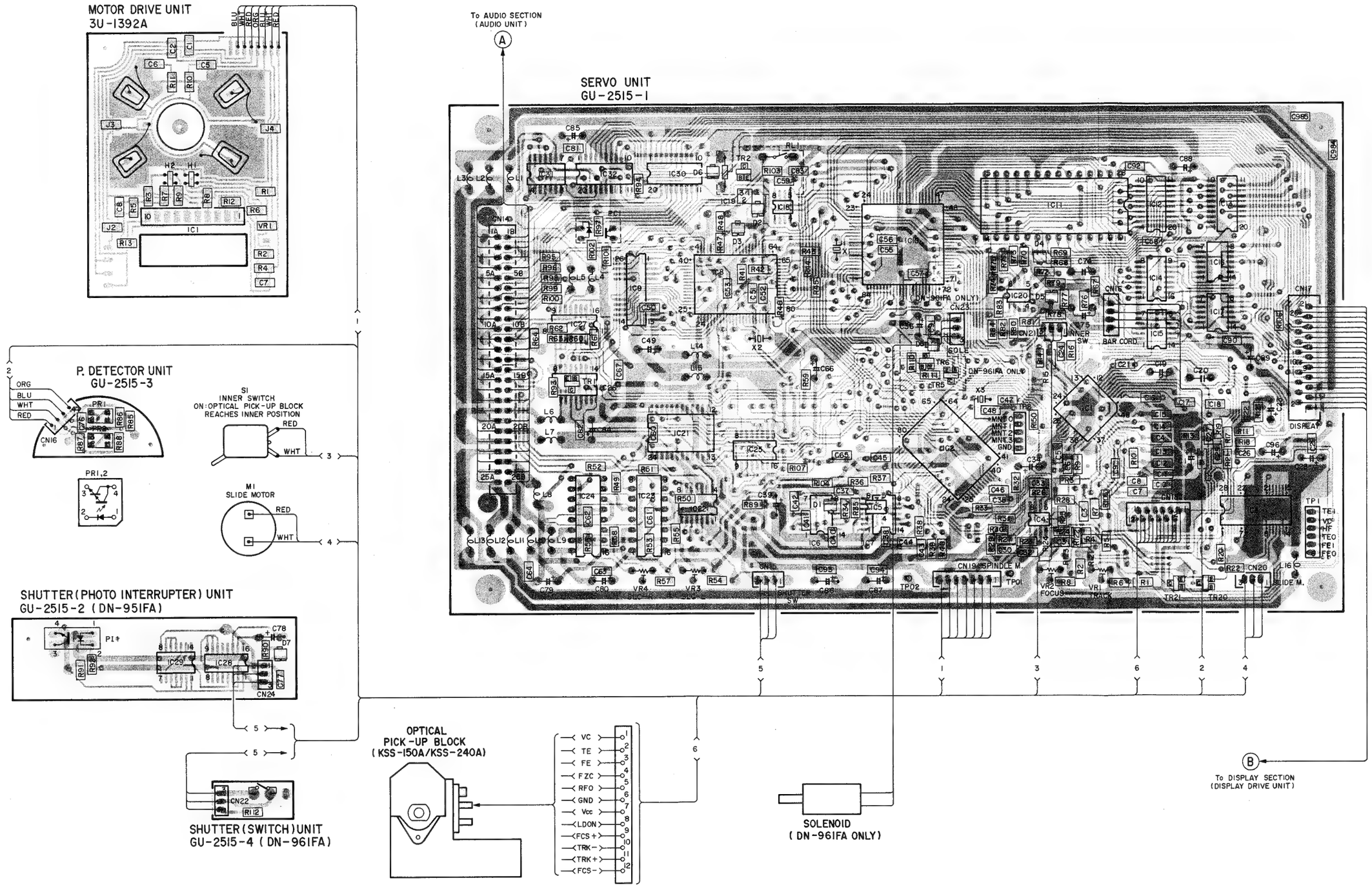

P.W.BOARD & WIRING DIAGRAM (AUDIO SECTION)

(BOTTOM VIEW)

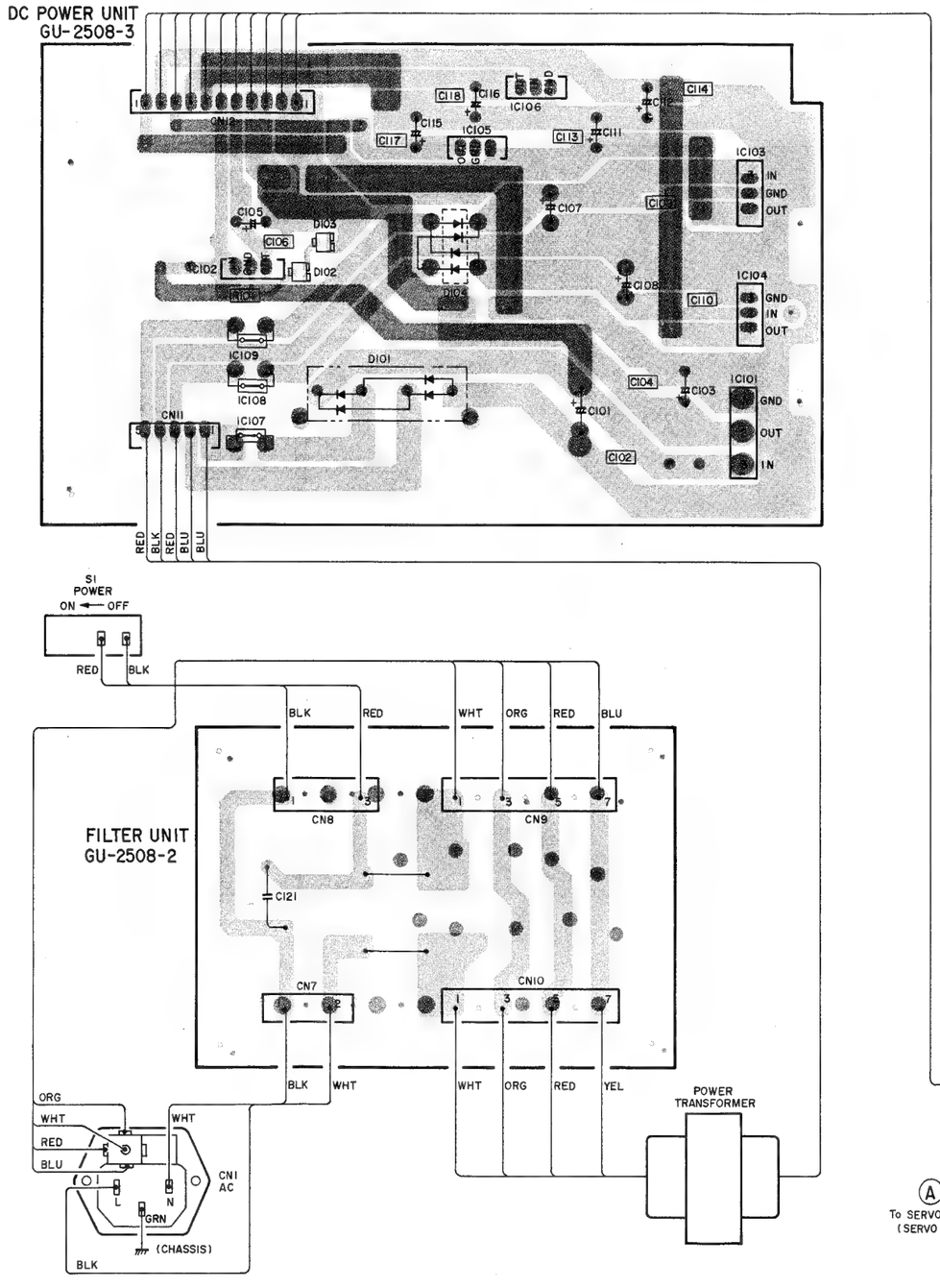

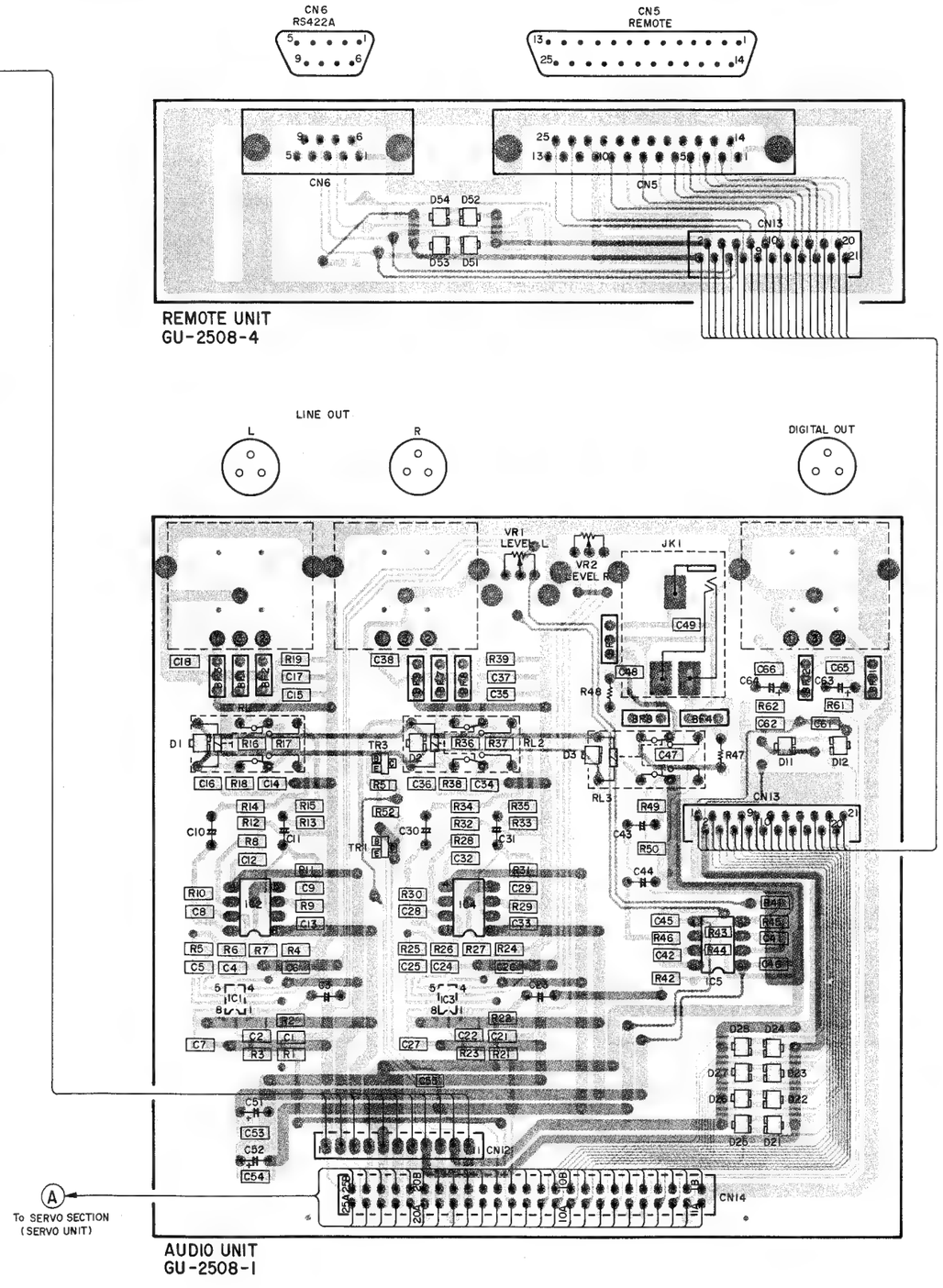

PARTS LIST OF P.W.BOARD
GU-2508 AUDIO/DISPLAY UNIT

Ref No.	Part No.	Part Name	Remarks
SEMICONDUCTORS GROUP			
IC001	263 0615 902	IC BA15218F (TAPE)	
IC002	263 0360 008	IC NE5532	
IC003	263 0615 902	IC BA15218F (TAPE)	
IC004	263 0360 008	IC NE5532	
IC005	263 0198 005	IC NJM4556D	
IC101	268 0061 001	IC SI-3052V	
IC102	263 0432 907	IC NJM78L05AT	
IC103	263 0507 007	IC NJM78M15FA	
IC104	263 0508 006	IC NJM79M15FA	
IC105	263 0567 005	IC NJM78M05FA	
IC106	263 0501 003	IC NJM79M05FA	
IC107	268 0078 900	IC ICP-N75T	
IC108,109	268 0076 902	IC ICP-N38T	
IC201,202	262 1707 900	IC TC74HC574AF (TP1)	
IC203	262 1708 909	IC TC74HC138AF (TP1)	
IC204,205	262 1710 900	IC HD74LS07FP-TR	
IC206	262 1709 908	IC TC74HC245AF (TP1)	
TR001	269 0048 904	Transistor DTC143EK-T96	
TR003	271 0260 905	Transistor 2SA1036KT146 (S/R)	
TR201~214	269 0091 906	Transistor DTC143TKT96	
TR215~221	271 0260 905	Transistor 2SA1036KT146 (S/R)	
TR222~224	269 0104 903	Transistor DTC343TK-T146	
D001~003	276 0438 910	Diode MA151A (TAPE)	
D011	276 0438 949	Diode MA151WK (TAPE)	
D012	276 0438 907	Diode MA151WA (TAPE)	
D021~024	276 0438 949	Diode MA151WK (TAPE)	
D025~028	276 0438 907	Diode MA151WA (TAPE)	
D051,052	276 0438 949	Diode MA151WK (TAPE)	
D053,054	276 0438 907	Diode MA151WA (TAPE)	
D101	276 0605 002	Diode RBA-406B	
D102,103	276 0438 910	Diode MA151A (TAPE)	
D104	276 0405 901	Diode S1WB (A) 10	
D201~208	276 0438 949	Diode MA151WK (TAPE)	
LE001	393 9414 007	LED SL-1263-30	
LE002	393 9415 019	LED 7LED SL2255 30 GRN	
LE003~005	393 9415 006	LED SL-1255-30 RED	
LE006~008	393 9462 017	LED SLR-40VC3F RED	
RESISTORS GROUP (Not included Carbon film ±5% 1/4W Type)			
R001,002	247 0009 998	Chip 11kohm, 1/10W	RM73B--113JT +2125
R003	247 0009 927	Chip 5.6kohm, 1/10W	RM73B--562JT +2125
R004	247 0009 943	Chip 6.8kohm, 1/10W	RM73B--682JT +2125
R005	247 0009 927	Chip 5.6kohm, 1/10W	RM73B--562JT +2125
R006	247 0010 932	Chip 16kohm, 1/10W	RM73B--163JT +2125
R007,008	247 0009 985	Chip 10kohm, 1/10W	RM73B--103JT +2125
R009	247 0010 961	Chip 22kohm, 1/10W	RM73B--223JT +2125
R010	247 0010 987	Chip 27kohm, 1/10W	RM73B--273JT +2125
R011	247 0010 929	Chip 15kohm, 1/10W	RM73B--153JT +2125
R012,013	247 0009 985	Chip 10kohm, 1/10W	RM73B--103JT +2125
R014,015	247 0003 949	Chip 22ohm, 1/10W	RM73B--220JT +2125
R016,017	247 0007 961	Chip 1.2kohm, 1/10W	RM73B--122JT +2125
R018,019	247 0012 927	Chip 100kohm, 1/10W	RM73B--104JT +2125

Ref No.	Part No.	Part Name	Remarks
R021,022	247 0009 998	Chip 11kohm, 1/10W	RM73B--113JT +2125
R023	247 0009 927	Chip 5.6kohm, 1/10W	RM73B--562JT +2125
R024	247 0009 943	Chip 6.8kohm, 1/10W	RM73B--682JT +2125
R025	247 0009 927	Chip 5.6kohm, 1/10W	RM73B--562JT +2125
R026	247 0010 932	Chip 16kohm, 1/10W	RM73B--163JT +2125
R027,028	247 0009 985	Chip 10kohm, 1/10W	RM73B--103JT +2125
R029	247 0010 961	Chip 22kohm, 1/10W	RM73B--223JT +2125
R030	247 0010 987	Chip 27kohm, 1/10W	RM73B--273JT +2125
R031	247 0010 929	Chip 15kohm, 1/10W	RM73B--153JT +2125
R032,033	247 0009 985	Chip 10kohm, 1/10W	RM73B--103JT +2125
R034,035	247 0003 949	Chip 22ohm, 1/10W	RM73B--220JT +2125
R036,037	247 0007 961	Chip 1.2kohm, 1/10W	RM73B--122JT +2125
R038,039	247 0012 927	Chip 100kohm, 1/10W	RM73B--104JT +2125
R041~044	247 0009 985	Chip 10kohm, 1/10W	RM73B--103JT +2125
R045,046	247 0011 928	Chip 39kohm, 1/10W	RM73B--393JT +2125
R047,048	244 2051 958	Metallic Film, 220 ohm, 1W	RS14B3A221JNBST(S)
R049~051	247 0009 985	Chip 10kohm, 1/10W	RM73B--103JT +2125
R052	247 0007 945	Chip 1kohm, 1/10W	RM73B--102JT +2125
R061,062	247 0004 948	Chip 56ohm, 1/10W	RM73B--560JT +2125
R101	247 0009 985	Chip 10kohm, 1/10W	RM73B--103JT +2125
R201	247 0009 985	Chip 10kohm, 1/10W	RM73B--103JT +2125
R202	247 0006 920	Chip 330ohm, 1/10W	RM73B--331JT +2125
R203	247 0009 985	Chip 10kohm, 1/10W	RM73B--103JT +2125
R204	247 0006 920	Chip 330ohm, 1/10W	RM73B--331JT +2125
R205	247 0009 985	Chip 10kohm, 1/10W	RM73B--103JT +2125
R206	247 0006 920	Chip 330ohm, 1/10W	RM73B--331JT +2125
R207	247 0009 985	Chip 10kohm, 1/10W	RM73B--103JT +2125
R208	247 0006 920	Chip 330ohm, 1/10W	RM73B--331JT +2125
R209	247 0009 985	Chip 10kohm, 1/10W	RM73B--103JT +2125
R210	247 0006 920	Chip 330ohm, 1/10W	RM73B--331JT +2125
R211	247 0009 985	Chip 10kohm, 1/10W	RM73B--103JT +2125
R212	247 0006 920	Chip 330ohm, 1/10W	RM73B--331JT +2125
R213	247 0009 985	Chip 10kohm, 1/10W	RM73B--103JT +2125
R214	247 0006 920	Chip 330ohm, 1/10W	RM73B--331JT +2125
R215~220	247 0009 985	Chip 10kohm, 1/10W	RM73B--103JT +2125
R221~223	247 0002 908	Chip 5.6ohm, 1/10W	RM73B--5R6KT +2125
R224~251	247 0004 922	Chip 47ohm, 1/10W	RM73B--470JT +2125
VR001,002	211 0552 006	Variable 1kohm (A)	V09QA102
CAPACITORS GROUP			
C001	257 0007 926	Ceramic (Chip) 0.0012µF/50V	CC73SL1H122JT +2125
C002	257 0005 931	Ceramic (Chip) 200pF/50V	CC73SL1H201JT +2125
C003	254 3058 708	Electrolytic 220µF/16V (Bipolar)	CE04D1C221MBPC (SME)
C004	257 0003 988	Ceramic (Chip) 47pF/50V	CC73SL1H470JT +2125
C005	257 0002 992	Ceramic (Chip) 20pF/50V	CC73SL1H200JT +2125
C006,007	257 0014 935	Ceramic (Chip) 0.1µF/25V	CK73F1E104ZT +2125
C008,009	257 0002 992	Ceramic (Chip) 20pF/50V	CC73SL1H200JT +2125
C010,011	254 3058 708	Electrolytic 220µF/16V (Bipolar)	CE04D1C221MBPC (SME)
C012~015	257 0014 935	Ceramic (Chip) 0.1µF/25V	CK73F1E104ZT +2125
C016,017	257 0005 986	Ceramic (Chip) 330pF/50V	CC73SL1H331JT +2125
C018	257 0014 935	Ceramic (Chip) 0.1µF/25V	CK73F1E104ZT +2125
C021	257 0007 926	Ceramic (Chip) 0.0012µF/50V	CC73SL1H122JT +2125
C022	257 0005 931	Ceramic (Chip) 200pF/50V	CC73SL1H201JT +2125
C023	254 3058 708	Electrolytic 220µF/16V (Bipolar)	CE04D1C221MBPC (SME)
C024	257 0003 988	Ceramic (Chip) 47pF/50V	CC73SL1H470JT +2125

Ref No.	Part No.	Part Name	Remarks
C025	257 0002 992	Ceramic (Chip) 20pF/50V	CC73SL1H200JT +2125
C026,027	257 0014 935	Ceramic (Chip) 0.1µF/25V	CK73F1E104ZT +2125
C028,029	257 0002 992	Ceramic (Chip) 20pF/50V	CC73SL1H200JT +2125
C030,031	254 3058 708	Electrolytic 220µF/16V (Bipolar)	CE04D1C221MBPC
C032~035	257 0014 935	Cermic (Chip) 0.1µF/25V	CK73F1E104ZT +2125
C036,037	257 0005 986	Ceramic (Chip) 330pF/50V	CC73SL1H331JT +2125
C038	257 0014 935	Ceramic (Chip) 0.1µF/25V	CK73F1E104ZT +2125
C041,042	257 0002 992	Ceramic (Chip) 20pF/50V	CC73SL1H200JT +2125
C043,044	254 3053 949	Electrolytic 100µF/16V (Bipolar)	CE04D1C101MBPT
C045,046	257 0014 935	Ceramic (Chip) 0.1µF/25V	CK73F1E104ZT +2125
C047,048	257 0012 908	Ceramic (Chip) 0.001µF/50V	CK73F1H102ZT +2125
C049	257 0014 935	Cermic (Chip) 0.1µF/25V	CK73F1E104ZT +2125
C051,052	254 4256 949	Electrolytic 100µF/25V	CE04W1E101MT
C053~055	257 0014 935	Ceramic (Chip) 0.1µF/25V	CK73F1E104ZT +2125
C061,062	257 0012 908	Ceramic (Chip) 0.001µF/50V	CK73F1H102ZT +2125
C063,064	254 4256 949	Electrolytic 100µF/25V	CE04W1E101MT
C065,066	257 0012 966	Ceramic (Chip) 0.01µF/50V	CK73F1H103ZT +2125
C101	254 4403 705	Electrolytic 6800µF/25V	CE04W1E682MC (SMG)
C102	257 0014 935	Ceramic (Chip) 0.1µF/25V	CK73F1E104ZT +2125
C103	254 4252 930	Electrolytic 100µF/10V	CE04W1A101MT
C104	257 0014 935	Ceramic (Chip) 0.1µF/25V	CK73F1E104ZT +2125
C105	254 4252 930	Electrolytic 100µF/10V	CE04W1A101MT
C106	257 0014 935	Ceramic (Chip) 0.1µF/25V	CK73F1E104ZT +2125
C107,108	254 4258 798	Electrolytic 1000µF/35V	CE04W1V102MC
C109,110	257 1015 920	Ceramic (Chip)0.1µF/50V	CK73F1H104ZT +3216
C111,112	254 4256 949	Electrolytic 100µF/25V	CE04W1E101MT
C113,114	257 0014 935	Ceramic (Chip) 0.1µF/25V	CK73F1E104ZT +2125
C115,116	254 4252 930	Electrolytic 100µF/10V	CE04W1A101MT
C117,118	257 0014 935	Ceramic (Chip) 0.1µF/25V	CK73F1E104ZT +2125
⚠C121	253 8014 702	Ceramic 0.01µF/400VAC	CK45F2GAC103MC
C201~203	257 0014 935	Ceramic (Chip) 0.1µF/25V	CK73F1E104ZT +2125
C204	254 4250 068	Electrolytic 1000µF/6.3V	CE04W0J102M
OTHER PARTS GROUP			
BF001,002	235 0086 002	EMI FILTER	
BF003	235 0048 008	EMI FILTER	
BF004	235 0086 002	EMI FILTER	
BF005	235 0048 008	EMI FILTER	
BF006~008	235 0086 002	EMI FILTER	
BF009	235 0048 008	EMI FILTER	
BF011,012	235 0086 002	EMI FILTER	
S001	212 1105 109	PUSH SWITCH	(PLAY/PAUSE)
S002	212 1108 009	PUSH SWITCH	(STDBY/CUE)
S003	212 0289 204	PULSE/PUSH SWITCH	(SELECT)
S004~008	212 4388 907	TACT SWITCH (IM)	
RL001~003	214 0109 005	RELAY	
JK001	204 8198 008	H/P JACK	
CN002~004	205 0781 034	3P CONN.(NC3MK-H)	
CN005	205 0618 013	25P DSUB SOCKET	
CN006	205 0618 000	9P DSUB SOCKET	
CN007	205 0217 029	2P CONN. BASE (ULTR)	
CN008	205 0217 032	3P CONN. BASE (ULTR)	
CN009,010	205 0653 078	7P VH CONN. BASE	
CN011	205 0190 052	5P NH CONN. BASE	
CN012	205 0275 016	11P EH CONN. BASE	
CN013	205 0668 047	21P FFC CONN. BASE	

Ref No.	Part No.	Part Name	Remarks
CN013	205 0702 039	21P FFC CONN. BASE (L)	
CN014	205 0783 003	50P DIN CONN. (S)	
CN017	205 0702 039	21P FFC CONN. BASE (L)	
CN022	205 0375 026	12P CONN. BASE (KR-PH)	
CN023	205 0375 042	14P CONN. BASE (KR-PH)	
CN024	205 0343 061	6P CONN. BASE (KR-PH)	
CW022	204 6377 009	12P KR-DS CONN. CORD	
CW023	204 6378 008	14P KR-DS CONN. CORD	
CW024	204 0168 081	6P KR-DS CONN. CORD	

GU-2515 SERVO / ICPU UNIT

Ref No.	Part No.	Part Name	Remarks
SEMICONDUCTORS GROUP			
IC001	262 1342 006	IC CXA1372Q (48P QFP)	
IC002	262 1514 009	IC CXD2500AQ	
IC003	263 0805 903	IC BA6296FP-T1	
IC004,005	263 0615 902	IC BA15218F (TAPE)	
IC006	262 1344 907	IC SN74LS624NSR (TAPE)	
IC007	262 1205 907	IC TC74HCU04AF (TP1)	
IC008	262 1474 000	IC µPD6381GF	
IC009	262 1772 906	IC TMS44C256-80/10DJ	
IC010	262 1473 001	IC µPD78233GJ-5BG	
IC011	GEN 2334	IC TMS27C256 SUB ASS'Y	
	GEN 2352	IC TMS27C256 SUB ASS'Y	
IC012	262 1721 902	IC TC74HC573AF (TP1)	
IC013	262 1343 908	IC SN74HC645NSR (TAPE)	
IC014	262 1708 909	IC TC74HC138AF (TP1)	
IC015	262 1718 902	IC TC74HC00AF (TP1)	
IC016,017	262 1636 903	IC TC74HC32AF (TP1)	
IC018	262 1711 909	IC X24C00S	
IC019	262 1647 905	IC MN1382-S (TX)	
IC020	263 0706 905	IC NJM2903M-T1 (TAPE)	
IC021	262 1664 904	IC CXD2554MT	
IC022	262 1205 907	IC TC74HCU04AF (TP1)	
IC023,024	262 1409 004	IC PCM61P-L	
IC026	262 1718 902	IC TC74HC00AF (TP1)	
IC027	262 1597 903	IC M5M34051FP (TAPE)	
IC028	262 1348 903	IC TC74HC123AF (TP1)	(DN-951FA Only)
IC029	262 1718 902	IC TC74HC00AF (TP1)	(DN-951FA Only)
IC030	262 1709 908	IC TC74HC245AF (TP1)	
IC031	262 0945 909	IC SN7438NS-R	
IC032	262 1707 900	IC TC74HC574AF (TP1)	
TR001	269 0048 904	Transistor DTC143EK-T96	
TR002	269 0047 905	Transistor DTA143EK-T96	
TR005	269 0048 904	Transistor DTC143EK-T96	(DN-961FA Only)
TR006	271 0260 905	Transistor 2SA1036KT146 (S/R)	(DN-961FA Only)
TR020,021	269 0103 904	Transistor DTC314TK-T146	
D001	276 0438 949	Diode MA151WK (TAPE)	
D002~006	276 0438 910	Diode MA151A (TAPE)	
D007	276 0438 910	Diode MA151A (TAPE)	(DN-951FA Only)
D008	276 0438 910	Diode MA151A (TAPE)	(DN-961FA Only)

Ref No.	Part No.	Part Name	Remarks
PI001	269 0094 000	Photo interrupter SPI-214-10 (B/C/D)	(DN-951FA Only)
PR001,002	269 0109 005	Photo interrupter SPI-315-35 (A/B/C)	(DN-951FA Only)
PC001	262 0874 009	Photo coupler TLP521-1 (BL)	
RESISTORS GROUP (Not included Carbon film ±5% 1/4W Type)			
R001	247 0010 987	Chip 27kohm, 1/10W	RM73B--273JT +2125
R002	247 0012 927	Chip 100kohm, 1/10W	RM73B--104JT +2125
R003	247 0012 969	Chip 150kohm, 1/10W	RM73B--154JT +2125
R004	247 0009 956	Chip 7.5kohm, 1/10W	RM73B--752JT +2125
R005	247 0011 960	Chip 56kohm, 1/10W	RM73B--563JT +2125
R006~008	247 0009 985	Chip 10kohm, 1/10W	RM73B--103JT +2125
R009	247 0012 930	Chip 110kohm, 1/10W	RM73B--114JT +2125
R010	247 0011 928	Chip 39kohm, 1/10W	RM73B--393JT +2125
R011	247 0012 914	Chip 91kohm, 1/10W	RM73B--913JT +2125
R012	247 0011 944	Chip 47kohm, 1/10W	RM73B--473JT +2125
R013	247 0009 998	Chip 11kohm, 1/10W	RM73B--113JT +2125
R014	247 0009 985	Chip 10kohm, 1/10W	RM73B--103JT +2125
R015	247 0013 913	Chip 240kohm, 1/10W	RM73B--244JT +2125
R016	247 0014 925	Chip 680kohm, 1/10W	RM73B--684JT +2125
R017	247 0012 943	Chip 120kohm, 1/10W	RM73B--124JT +2125
R018	247 0011 986	Chip 68kohm, 1/10W	RM73B--683JT +2125
R019	247 0012 956	Chip 130kohm, 1/10W	RM73B--134JT +2125
R020	247 0010 929	Chip 15kohm, 1/10W	RM73B--153JT +2125
R021	247 0009 943	Chip 6.8kohm, 1/10W	RM73B--682JT +2125
R022	247 0010 916	Chip 13kohm, 1/10W	RM73B--133JT +2125
R023	247 0012 914	Chip 91kohm, 1/10W	RM73B--913JT +2125
R024	247 0012 927	Chip 100kohm, 1/10W	RM73B--104JT +2125
R025~027	247 0011 944	Chip 47kohm, 1/10W	RM73B--473JT +2125
R028	247 0008 931	Chip 2.4kohm, 1/10W	RM73B--242JT +2125
R029,030	247 0009 985	Chip 10kohm, 1/10W	RM73B--103JT +2125
R031	247 0009 956	Chip 7.5kohm, 1/10W	RM73B--752JT +2125
R032	247 0012 927	Chip 100kohm, 1/10W	RM73B--104JT +2125
R033	247 0009 985	Chip 10kohm, 1/10W	RM73B--103JT +2125
R034	247 0006 962	Chip 470ohm, 1/10W	RM73B--471JT +2125
R035	247 0011 902	Chip 33kohm, 1/10W	RM73B--333JT +2125
R036	247 0009 985	Chip 10kohm, 1/10W	RM73B--103JT +2125
R037	247 0009 901	Chip 4.7kohm, 1/10W	RM73B--472JT +2125
R038	247 0009 985	Chip 10kohm, 1/10W	RM73B--103JT +2125
R039	247 0008 960	Chip 3.3kohm, 1/10W	RM73B--332JT +2125
R040	247 0009 943	Chip 6.8kohm, 1/10W	RM73B--682JT +2125
R041~046	247 0009 985	Chip 10kohm, 1/10W	RM73B--103JT +2125
R047	247 0008 928	Chip 2.2kohm, 1/10W	RM73B--222JT +2125
R048	247 0005 989	Chip 220ohm, 1/10W	RM73B--221JT +2125
R049~052	247 0007 945	Chip 1kohm, 1/10W	RM73B--102JT +2125
R053	247 0013 984	Chip 470kohm, 1/10W	RM73B--474JT +2125
R054	247 0012 998	Chip 200kohm, 1/10W	RM73B--204JT +2125
R055	247 0014 967	Chip 1Mohm, 1/10W	RM73B--105JT +2125
R056	247 0013 984	Chip 470kohm, 1/10W	RM73B--474JT +2125
R057	247 0012 998	Chip 200kohm, 1/10W	RM73B--204JT +2125
R058	247 0014 967	Chip 1Mohm, 1/10W	RM73B--105JT +2125
R060,061	247 0012 969	Chip 150kohm, 1/10W	RM73B--154JT +2125
R062,063	247 0009 985	Chip 10kohm, 1/10W	RM73B--103JT +2125
R064	247 0005 905	Chip 100ohm, 1/10W	RM73B--101JT +2125
R067	247 0012 927	Chip 100kohm, 1/10W	RM73B--104JT +2125
R068,069	247 0009 901	Chip 4.7kohm, 1/10W	RM73B--472JT +2125

Ref No.	Part No.	Part Name	Remarks
R070	247 0009 985	Chip 10kohm, 1/10W	RM73B--103JT +2125
R071	247 0013 900	Chip 220kohm, 1/10W	RM73B--224JT +2125
R072	247 0009 927	Chip 5.6kohm, 1/10W	RM73B--562JT +2125
R073	247 0014 938	Chip 750kohm, 1/10W	RM73B--754JT +2125
R074	247 0014 967	Chip 1Mohm, 1/10W	RM73B--105JT +2125
R075	247 0009 985	Chip 10kohm, 1/10W	RM73B--103JT +2125
R076	247 0012 927	Chip 100kohm, 1/10W	RM73B--104JT +2125
R077,078	247 0009 901	Chip 4.7kohm, 1/10W	RM73B--472JT +2125
R079	247 0009 985	Chip 10kohm, 1/10W	RM73B--103JT +2125
R080	247 0013 900	Chip 220kohm, 1/10W	RM73B--224JT +2125
R081	247 0009 927	Chip 5.6kohm, 1/10W	RM73B--562JT +2125
R082	247 0014 938	Chip 750kohm, 1/10W	RM73B--754JT +2125
R083	247 0014 967	Chip 1Mohm, 1/10W	RM73B--105JT +2125
R084	247 0009 985	Chip 10kohm, 1/10W	RM73B--103JT +2125
R085	247 0007 945	Chip 1kohm, 1/10W (DN-951FA)	RM73B--102JT +2125
R086	247 0007 961	Chip 1.2kohm, 1/10W (DN-951FA)	RM73B--122JT +2125
R087	247 0007 945	Chip 1kohm, 1/10W (DN-951FA)	RM73B--102JT +2125
R088	247 0007 961	Chip 1.2kohm, 1/10W (DN-951FA)	RM73B--122JT +2125
R089	247 0009 985	Chip 10kohm, 1/10W	RM73B--103JT +2125
R090	247 0013 984	Chip 470kohm, 1/10W (DN-951FA)	RM73B--474JT +2125
R091	247 0009 985	Chip 10kohm, 1/10W (DN-951FA)	RM73B--103JT +2125
R092	247 0005 921	Chip 120ohm, 1/10W (DN-951FA)	RM73B--121JT +2125
R093	247 0009 901	Chip 4.7kohm, 1/10W	RM73B--472JT +2125
R094~101	247 0008 928	Chip 2.2kohm, 1/10W	RM73B--222JT +2125
R102	247 0006 962	Chip 470ohm, 1/10W	RM73B--471JT +2125
R103	247 0005 921	Chip 120ohm, 1/10W	RM73B--121JT +2125
R104	247 0006 917	Chip 300ohm, 1/10W	RM73B--301JT +2125
R105	247 0008 928	Chip 2.2kohm, 1/10W	RM73B--222JT +2125
R106,107	247 0009 985	Chip 10kohm, 1/10W	RM73B--103JT +2125
R110	247 0009 985	Chip 10kohm, 1/10W (DN-961FA)	RM73B--103JT +2125
R111	247 0007 945	Chip 1kohm, 1/10W (DN-961FA)	RM73B--102JT +2125
R121	247 0009 985	Chip 10kohm, 1/10W	RM73B--103JT +2125
R123	247 0009 985	Chip 10kohm, 1/10W	RM73B--103JT +2125
R150	247 0009 985	Chip 10kohm, 1/10W	RM73B--103JT +2125
VR001,002	211 6046 095	Variable 22kohm (B)	V06QB (223)
VR003,004	211 6046 024	Variable 100kohm (B)	V06QB104
CAPACITORS GROUP			
C001	254 4250 068	Electrolytic 1000µF/6.3V	CE04W0J102M (SME)
C002	257 0014 935	Ceramic (Chip) 0.1µF/25V	CK73F1E104ZT +2125
C003	257 0009 940	Ceramic (Chip) 0.0033µF/50V	CK73B1H332KT +2125
C004	257 1013 951	Ceramic (Chip) 0.047µF/25V	CK73B1E473KT +2125
C005	257 1011 966	Ceramic (Chip) 0.033µF/50V	CK73B1H333KT +3216
C006	257 0014 935	Ceramic (Chip) 0.1µF/25V	CK73F1E104ZT +2125
C007	257 0010 900	Ceramic (Chip) 0.01µF/50V	CK73B1H103KT +2125
C008	257 0009 937	Ceramic (Chip) 0.0027µF/50V	CK73B1H272KT +2125

Ref No.	Part No.	Part Name	Remarks
C009	257 0010 900	Ceramic (Chip) 0.01µF/50V	CK73B1H103KT +2125
C010	257 0014 935	Ceramic (Chip) 0.1µF/25V	CK73F1E104ZT +2125
C011	257 0006 943	Ceramic (Chip) 560pF/50V	CC73SL1H561JT +2125
C012	257 1013 951	Ceramic (Chip) 0.047µF/25V	CK73B1E473KT +3216
C013	257 1013 993	Ceramic (Chip) 0.1µF/25V	CK73B1E104KT +3216
C014	257 0009 924	Ceramic (Chip) 0.0022µF/50V	CK73B1H222KT +2125
C015	257 1013 993	Ceramic (Chip) 0.1µF/25V	CK73B1E104KT +3216
C016	257 0014 935	Ceramic (Chip) 0.1µF/25V	CK73F1E104ZT +2125
C017	257 1013 980	Ceramic (Chip) 0.082µF/25V	CK73B1E823KT +3216
C018	257 1011 966	Ceramic (Chip) 0.033µF/50V	CK73B1H333KT +3216
C019	254 4337 910	Electrolytic 6.8µF/50V	CE04W1H6R8MT
C020	256 1035 910	Metallized 0.22µF/50V	CF93A1H224JT
C021	257 0014 935	Ceramic (Chip) 0.1µF/25V	CK73F1E104ZT +2125
C022	257 1013 993	Ceramic (Chip) 0.1µF/25V	CK73B1E104KT +3216
C023	254 4260 977	Electrolytic 4.7µF/50V	CE04W1H4R7MT
C024	257 0010 900	Ceramic (Chip) 0.01µF/50V	CK73B1H103KT +2125
C025	257 0002 921	Ceramic (Chip) 10pF/50V	CC73SL1H100DT +2125
C026	257 0002 992	Ceramic (Chip) 20pF/50V	CC73SL1H200JT +2125
C027	257 0003 991	Ceramic (Chip) 51pF/50V	CC73SL1H510JT +2125
C028	254 4254 938	Electrolytic 47µF/16V	CE04W1C470MT
C029~031	257 0014 935	Ceramic (Chip) 0.1µF/25V	CK73F1E104ZT +2125
C032	257 0004 961	Ceramic (Chip) 100pF/50V	CC73SL1H101JT +2125
C033	257 0010 900	Ceramic (Chip) 0.01µF/50V	CK73B1H103KT +2125
C034	254 4260 919	Electrolytic 0.22µF/50V	CE04W1HR22MT
C035	257 0010 900	Ceramic (Chip) 0.01µF/50V	CK73B1H103KT +2125
C036	254 4300 963	Electrolytic 100µF/6.3V	CE04W0J101MT (SRE)
C037,038	257 0014 935	Ceramic (Chip) 0.1µF/25V	CK73F1E104ZT +2125
C039	254 4260 922	Electrolytic 0.33µF/50V	CE04W1HR33MT
C040	257 0014 935	Ceramic (Chip) 0.1µF/25V	CK73F1E104ZT +2125
C041	257 0003 959	Ceramic (Chip) 36pF/50V	CC73SL1H360JT +2125
C042	257 0002 963	Ceramic (Chip) 15pF/50V	CC73SL1H150JT +2125
C043	257 1013 951	Ceramic (Chip) 0.047µF/25V	CK73B1E473KT +3216
C044	257 0007 942	Ceramic (Chip) 0.0015µF/50V	CC73SL1H152JT +2125
C045,046	257 0014 935	Ceramic (Chip) 0.1µF/25V	CK73F1E104ZT +2125
C047,048	257 0002 921	Ceramic (Chip) 10pF/50V	CC73SL1H100DT +2125
C049	254 4250 929	Electrolytic 100µF/6.3V	CE04W0J101MT
C050	257 0014 935	Ceramic (Chip) 0.1µF/25V	CK73F1E104ZT +2125
C051,052	257 0003 904	Ceramic (Chip) 22pF/50V	CC73SL1H220JT +2125
C053	257 0014 935	Ceramic (Chip) 0.1µF/25V	CK73F1E104ZT +2125
C055,056	257 0003 904	Ceramic (Chip) 22pF/50V	CC73SL1H220JT +2125
C057~060	257 0014 935	Ceramic (Chip) 0.1µF/25V	CK73F1E104ZT +2125
C061,062	257 1016 932	Ceramic (Chip) 0.22µF/25V	CK73F1E224ZT +3216
C063~065	257 0014 935	Ceramic (Chip) 0.1µF/25V	CK73F1E104ZT +2125
C067	257 0014 935	Ceramic (Chip) 0.1µF/25V	CK73F1E104ZT +2125
C074,075	254 4300 947	Electrolytic 47µF/6.3V	CE04W0J470MT (SRE)
C076,077	257 0014 935	Ceramic (Chip) 0.1µF/25V (DN-951FA Only)	CK73F1E104ZT +2125
C078	254 4305 968	Ceramic (Chip) 1µF/50V (DN-951FA Only)	CE04W1H010MT (SRE)
C079,080	254 4250 929	Electrolytic 100µF/6.3V	CE04W0J101MT
C081,082	257 0014 935	Ceramic (Chip) 0.1µF/25V	CK73F1E104ZT +2125
C083	257 1011 966	Ceramic (Chip) 0.033µF/50V	CK73B1H333KT +3216
C084,085	254 4250 929	Electrolytic 100µF/6.3V	CE04W0J101MT
C086,087	254 4254 941	Electrolytic 100µF/16V	CE04W1C101MT
C088,089	254 4256 949	Electrolytic 100µF/25V	CE04W1E101MT
C090~094	257 0014 935	Ceramic (Chip) 0.1µF/25V	CK73F1E104ZT +2125
C096	254 4250 068	Electrolytic 1000µF/6.3V	CE04W0J102M

Ref No.	Part No.	Part Name	Remarks
OTHER PARTS GROUP			
X001	399 0179 006	Crystal Oscillator (11.0592MHz)	
X002	399 0141 005	Ceramic Oscillator (CSA24.57MX040)	
X003	399 0036 013	Crystal Oscillator (16.9344MHz)	
L001~016	235 0049 900	BEADS INDUCTOR TAPE	
RL001	214 0121 009	RELAY	
CN014	205 0782 004	50P DIN CONN.(P)	
CN015	205 0406 034	3P CONN. BASE (KR-PH)	
CN016	205 0343 045	4P CONN. BASE (KR-PH)	(DN-951FA Only)
CN017	205 0269 077	21P FFC CONN. BASE	
CN018	205 0683 006	FFC CONN. BASE (12P)	
CN019	205 0343 074	7P CONN. BASE (KR-PH)	
CN020	205 0321 038	3P CONN. BASE (RED)	
CN021	205 0323 036	3P CONN. BASE (BLK)	
CN022	205 0686 032	3P CONN. BASE (BLU)L	(DN-961FA Only)
CN023	205 0343 032	3P CONN. BASE (KR-PH)	(DN-961FA Only)
CN024	205 0686 032	3P CONN. BASE (BLU)L	(DN-951FA Only)
TP001	205 0355 062	6P KR CONN. BASE (L)	
TP002	205 0343 058	5P CONN. BASE (KR-PH)	
	205 0488 010	28P IC SOCKET	(IC011)
⚠T001	233 5992 001	POWER TRANS EU	(U.S.A./CANADA MODELS)
⚠T001	233 6038 003	POWER TRANS EI	(Multi-Voltage MODEL)
⚠CN001	203 3935 001	AC INLET	
⚠F001	206 1039 034	FUSE 1A	1A/125V (U.S.A./CANADA MODELS)
⚠F001	206 1015 045	FUSE	315mA/250V (Multi-Voltage MODEL)
⚠S001	212 4695 001	POWER SWITCH	
CW012	204 6379 007	11P EH CONN. CORD	
CW007	203 2208 108	2P ULTREX CORD	
CW008	203 4494 017	3P ULTREX CORD	
CW009	204 2566 005	7P VH CONN.CORD	
CW013	009 0079 012	21P FFC	
CW017	009 0079 009	21P FFC	

3U-1392A MOTOR DRIVE UNIT

Ref No.	Part No.	Part Name	Remarks
SEMICONDUCTORS			
IC1	263 0411 009	TA7256P	
H1,2	268 0053 019	HW-101C(Q)	
RESISTORS			
R1	247 1018 904	0Ω	RM73B20R0KT +3216
R2~5	247 1013 909	220KΩ, 1/8W	RM73B2B224JT +3216
R6~9	247 1008 985	3.9kΩ, 1/8W	RM73B2B392JT +3216
R10,11	247 1002 965	10Ω, 1/8W	RM73B2B100JT +3216
R12,13	247 1001 908	2.2Ω, 1/8W	RM73B2B2R2JT +3216
VR1	247 1018 904	0Ω	RM73B20R0KT +3216
J2~4	247 1018 904	0Ω	RM73B20R0KT +3216
CAPACITORS			
C1,2	257 1016 945	0.33µF/25V	CK73F1E334ZT +3216
C5,6	257 0014 935	0.1µF/25V	CK73F1E104ZT +2125
C7, 8	257 0012 924	0.0022µF/50V	CK73F1H222ZT +2125
OTHER PARTS			
CW19	204 2203 009	7P PH CONNECTOR CORD	
L1~4	346 0029 000	SP MOTOR COIL	

SEMICONDUCTORS

● IC's (Microcomputer)

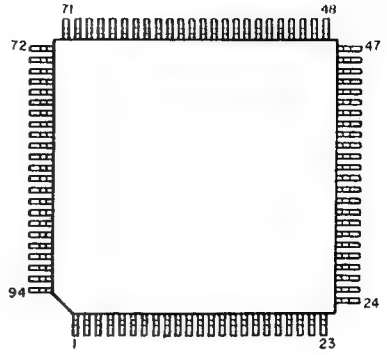

μPD78233GJ-5BG Terminal Function

Terminal No.	Symbol Name	I/O	Terminal Function
1	$\overline{OE}$	O	Control signal of display output.
2	$\overline{RST2}$	O	Reset signal of IC8 (μPD6381GF).
3	CLD	O	Interface load input
4	LOCK	I	Eject Lock
5	—	I	Not used.
6	SO	I	IC8 serial data input.
7	RST–	I	Hard reset input. Reset at "L".
8	V_{DD}	—	+5V power supply.
9	X2	I	Clock oscillation circuit input 2.
10	X1	I	Clock oscillation circuit input 1.
11	V_{SS}	—	0V power supply.
12	V_{SS}	—	0V power supply.
13	—	—	Not connected.
14	CLOK	O	Clock for servo command, level command. Connected to IC2, IC21.
15	DATA	O	Data for servo command, level command. Connected to IC2, IC21.
16	XLAT	O	Latch pulse of servo command. Latched at falling edge.
17	MUTE	O	Mute output.
18	LDON	O	Laser ON/OFF signal of optical pickup. Laser emits light at "H".
19	SC0	O	Scan signal 0
20	SC1	O	Scan signal 1
21	—	—	Not connected.
22	SC2	O	Scan signal 2
23	$\overline{REFRQ}$	I	Refresh Request
24	$\overline{WAIT}$	O	Wait
25	$\overline{WR}$	O	Write strobe
26	$\overline{RD}$	O	Read strobe
27	CS–	O	Chip select signal of IC8. Normally "H". "L" at select only.
28	C/$\overline{D}$	O	Command/data designate signal of IC8. Command at "L", indicates data transmitting mode at "H".
29	SCK–	O	Clock for command transmission to IC8.
30	SI	O	Command data to IC8.
31	—	—	Not connected.
32	A15	O	Memory address 15.
33	A14	O	Memory address 14.
34	A13	O	Memory address 13.
35	—	—	Not connected.
36	A12	O	Memory address 12.
37	A11	O	Memory address 11.
38	A10	O	Memory address 10.
39	A9	O	Memory address 9.
40	A8	O	Memory address 8.
41	—	—	Not connected.
42	AD7	I/O	Data bus 7.
43	AD6	I/O	Data bus 6.

Terminal No.	Symbol Name	I/O	Terminal Function
44	AD5	I/O	Data bus 5.
45	AD4	I/O	Data bus 4.
46	AD3	I/O	Data bus 3.
47	AD2	I/O	Data bus 2.
48	AD1	I/O	Data bus 1.
49	AD0	I/O	Data bus 0.
50	ASTB	O	Pulse for address latch.
51	V_{SS}	—	0V power supply.
52	V_{SS}	—	0V power supply.
53	—	—	Not connected.
54	MODE	I	Memory read select terminal.
55	—	—	Not connected.
56	AMUTE	O	Audio output mute signal. Mute at "H".
57	SQCK	O	Clock for sub—code reading.
58	SENS	I	Indication signal of servo actuating condition. Emits from IC2.
59	MIRR ON	I	Mirror on.
60	—	—	Not connected.
61	MD2	I	Digital-out ON/OFF control.
62	SQSO	I	Sub-code data input. Emits from IC2.
63	DFLAT	O	Command latch pulse for digital filter. Output to IC300.
64	DMD	O	Digital mode select.
65	V_{DD}	—	+5v power supply.
66	V_{DD}	—	+5v power supply.
67	—	I	Not used.
68	—	I	Not used.
69	—	I	Not used. Fixed to "L".
70	—	—	Not connected.
71	—	I	Not used. Fixed to "L".
72	—	I	Not used. Fixed to "L".
73	—	I	Not used. Fixed to "L".
74	$\overline{BCOD}$	I	Bar code data.
75	$\overline{BCK}$	I	Bit clock.
76	AV_{DD}	—	+5V power supply for A/D converter.
77	AVREF1	—	+5V. A/D converter reference voltage.
78	—	—	Not connected.
79	AV_{SS}	—	0V power supply for A/D converter.
80	—	O	Not used.
81	—	O	Not used.
82	AVREF2	—	+5V. D/A converter reference voltage.
83	AVREF3	—	0V. D/A converter reference voltage.
84	—	—	Not connected.
85	—	I	Not used. Fixed to OV.
86	SHUT	I	Shutter switch.
87	—	I	Not used.
88	WFCK	I	Connected to WFCK output of IC2. 7.35kHz clock.
89	SCOR	I	Sub-code sink input. Connect to IC2. Input 75 pulses per 1 second.
90	DRDY	I	Data receiving READY signal of IC8. Fixed to "H".
91	—	I	Not used. Fixed to "L".
92	OVF–	I	Over flag of IC8. Normally "H".
93	RXD–	I	Serial interface reception data.
94	TXD–	O	Serial interface transmission data.

μPD6381GF (IC8) Terminal Function

Terminal No.	Symbol Name	I/O	Terminal Function
1	DRDY	O	Command reception READY signal from microcomputer. Normally "H".
2	FSMASK	I	PC-RST mask signal. Fixed to "L".
3	SEL	I	Clock input select. Fixed to "H".
4	—	I	Not used.
5	XO	O	X'tal oscillation output.
6	XI	I	X'tal oscillation input.
7	GND	—	0V power supply.
8	XFSO	O	Clock Output. Not used.
9	—	—	Not connected.
10	LRCKO	O	LR clock output. 44.1kHz.
11	WCLKO	O	Word clock output. 88.2kHz. Not used.
12	BCLKO	O	Bit clock output. 2.1MHz.
13	BRAK–	O	Break acknowledge output. Fixed to "H".
14	GND	—	0V power supply.
15	BRRQ–	I	Break request input. Fixed to "H".
16	FSRST–	I	Program counter reset input. Fixed to "H".
17	RST2–	I	Soft reset input. Normally "H".
18	RST–	I	Hard reset input. Normally "H".
19	A0	O	External RAM address 0.
20	A1	O	External RAM address 1.
21	A2	O	External RAM address 2.
22	A3	O	External RAM address 3.
23	A4	O	External RAM address 4.
24	A5	O	External RAM address 5.
25	A6	O	External RAM address 6.
26	A7	O	External RAM address 7.
27	A8	O	External RAM address 8.
28	A9	O	External RAM address 9. Not used.
29	A10	O	External RAM address 10. Not used.
30	A11	O	External RAM address 11. Not used.
31	A12	O	External RAM address 12. Not used.
32	A13	O	External RAM address 13. Not used.
33	V_{DD}	—	+5V power supply.
34	A14	O	External RAM address 14. Not used.
35	A15	O	External RAM address 15. Not used.
36	A16	O	External RAM address 16. Not used.
37	RAS–	O	External RAM low address strobe signal.
38	CAS–	O	External RAM column address strobe signal.
39	WE–	O	External RAM write enable signal.
40	I/O1	I/O	External RAM data 1.
41	I/O2	I/O	External RAM data 2.
42	I/O3	I/O	External RAM data 3.
43	I/O4	I/O	External RAM data 4.
44	I/O5	I/O	External RAM data 5. Not used.
45	I/O6	I/O	External RAM data 6. Not used.
46	I/O7	I/O	External RAM data 7. Not used.
47	I/O8	I/O	External RAM data 8. Not used.
48	I/O9	I/O	External RAM data 9. Not used.
49	I/O10	I/O	External RAM data 10. Not used.
50	I/O11	I/O	External RAM data 11. Not used.
51	I/O12	I/O	External RAM data 12. Not used.

Terminal No.	Symbol Name	I/O	Terminal Function
52	I/O13	I/O	External RAM data 13. Not used.
53	I/O14	I/O	External RAM data 14. Not used.
54	I/O15	I/O	External RAM data 15. Not used.
55	I/O16	I/O	External RAM data 16. Not used.
56	GND	—	0V power supply.
57	MD0	I	Mode select 0. Fixed to "L".
58	MD1	I	Mode select 1. Fixed to "H".
59	MD2	I	Mode select 2. Fixed to "L".
60	BCLK1	I	Bit clock input. 2.18MHz.
61	LRCK1	I	LR clock input. 44.1kHz.
62	BCLK2	I	Bit clock input.
63	LRCK2	I	LR clock input.
64	DI1	I	Data input.
65	DO1	O	Data output.
66	DI2	I	Data input.
67	DO2	O	Not used.
68	DO3	O	Not used.
69	DORQ–	I	Data out request input.
70	GF–	O	G flag output. Not used.
71	OVF–	O	Overflow output. Normally "H".
72	V_{DD}	—	+5V power supply.
73	TEST0	I	Fixed to "H".
74	TEST1	I	Fixed to "H".
75	SETRDY	O	Not used.
76	SO	O	Serial data output.
77	SCK–	I	Serial data input/output clock.
78	SI	I	Serial data input.
79	C–/D	I	Command /data designation signal. "L" - command, "H" - data.
80	CS–	I	Chip select input.

μPD6381GF

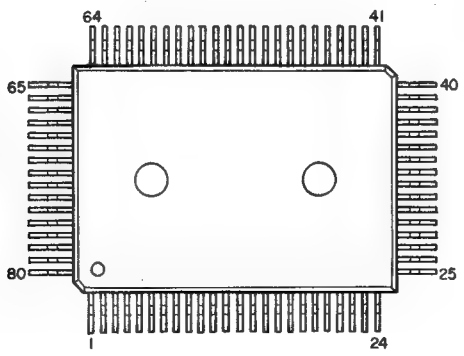

CXD2500AQ Terminal Function

Terminal No.	Symbol	I/O		Terminal Function
1	FOK	I		Input terminal for OK focussing. Use for Servo-autosequencer.
2	FSW	O	Z,0	Output to shift time constant of output filter for spindle motor.
3	MON	O	1,0	ON/OFF control output for spindle motor.
4	MDP	O	1,Z,0	Servo control for spindle motor.
5	MDS	O	1,Z,0	Servo control for spindle motor.
6	LOCK	O	1,0	Sampling GFS by 460 Hz and if it is "H", delivers "H" ; if it is continuously "L" 8 times, delivers "L".
7	NC		—	
8	VCOO	O	1,0	Oscillation current output for analog EFM PLL.
9	VCOI	I		Oscillation current output for analog EFM PLL. f LOCK=8.6436MHz.
10	TEST	I		TEST output. Normally GND.
11	PDO	O	1,Z,0	Charge pump output for analog EFM PLL.
12	Vss			GND.
13	NC		—	
14	NC		—	
15	NC		—	
16	VPCO	O	1,Z,0	Charge pump output for variable pitch PLL.
17	VCKI	O		Clock input from external VCO for variable pitch. fc center=16.9344MHz.
18	FILO	O	Analog	Filter output for master PLL. (slave=digital PLL)
19	FILI	I		Filter input for master PLL.
20	PCO	O	1,Z,0	Charge pump output for master PLL.
21	AVss			Analog GND.
22	CLTV	I		Control voltage input for master VCO.
23	AV_{DD}			Analog power supply (+5V).
24	RF	I		EFM signal input.
25	BIAS	I		Constant-current input for Asymmetry circuit.
26	ASYI	I		Comparator voltage input for Asymmetry.
27	ASYO	O	1,0	Full swing output for EFM. (L=Vss, H=V_{DD}).
28	ASYE	I		L: Asymmetry circuit → OFF. H: Asymmetry circuit → ON.
29	NC		—	
30	PSSL	I		Input to shift output mode of audio data. Serial output at L; parallel output at H.
31	WDCK	O	1,0	D/A Interface for 48 bit slot. Word-clock f=2 Fs.
32	LRCK	O	1,0	D/A Interface for 48 bit slot. LR-clock f= Fs.
33	V_{DD}			Power supply (+5V).
34	DA16	O	1,0	At PSSL=1 for DA16 (MSB) output; PSSL=0 for serial data of 48 bit slot. (2s'COMP, MSB first).
35	DA15	O	1,0	At PSSL=1 for DA15 output; PSSL=0 for bit clock of 48 bit slot.
36	DA14	O	1,0	At PSSL=1 for DA14 output; PSSL=0 for serial data of 64 bit slot. (2s'COMP, LSB first).
37	DA13	O	1,0	At PSSL=1 for DA13 output; PSSL=0 for bit clock of 64 bit slot.
38	DA12	O	1,0	At PSSL=1 for DA12 output; PSSL=0 for LR clock of 64 bit slot.
39	DA11	O	1,0	At PSSL=1 for DA11 output; PSSL=0 for GTOP output.
40	DA10	O	1,0	At PSSL=1 for DA10 output; PSSL=0 for XUGF output.
41	DA09	O	1,0	At PSSL=1 for DA09 output; PSSL=0 for XPLCK output.
42	DA08	O	1,0	At PSSL=1 for DA08 output; PSSL=0 for GFS output.
43	DA07	O	1,0	At PSSL=1 for DA07 output; PSSL=0 for RFCK output.
44	DA06	O	1,0	At PSSL=1 for DA06 output; PSSL=0 for C2P0 output.
45	DA05	O	1,0	At PSSL=1 for DA05 output; PSSL=0 for XRAOF output.
46	DA04	O	1,0	At PSSL=1 for DA04 output; PSSL=0 for MNT3 output.
47	DA03	O	1,0	At PSSL=1 for DA03 output; PSSL=0 for MNT2 output.
48	DA02	O	1,0	At PSSL=1 for DA02 output; PSSL=0 for MNT1 output.
49	DA01	O	1,0	At PSSL=1 for DA01 output; PSSL=0 for MNT0 output.
50	APTR	O	1,0	Control output for aperture compensation. In H for R-ch.
51	APTL	O	1,0	Control output for aperture compensation. In H for L-ch.

Terminal No.	Symbol	I/O		Terminal Function
52	Vss			GND.
53	XTAI	I		X'tal oscillation circuit input. By selecting of mode, f=16.9344MHz or 33.8688MHz.
54	XTAO	O	1,0	X'tal oscillation circuit input. f=16.9344MHz.
55	XTSL	I		Selection input terminal of X'tal. "L" for X'tal 16.9344MHz; "H" for 33.8688MHz.
56	FSTT	O	1,0	2/3 Dividing output of 53 and 54 terminal. No change by variable pitch.
57	C4M	O	1,0	4.2336MHz output. When variable pitched, simultaneously changes.
58	C16M	O	1,0	16.9344MHz output. When variable pitched, simultaneously changes.
59	MD2	I		Digital-out ON/OFF control. ON at H; OFF at L.
60	DOUT	O	1,0	Digital-out output terminal.
61	EMPH	O	1,0	When playback disc emphasized, outputs H; otherwise outputs L.
62	WFCK	O	1,0	WFCK (Write Flame Clock) output.
63	SCOR	O	1,0	Output of subcode sync. S0+S1. H output when either one detected.
64	SBSO	O	1,0	Serial output of Sub P~W.
65	EXCK	I		Clock iutput for SBSO read-out.
66	SQSO	O	1,0	Output for Sub Q 80 bits and PCM peak level 16 bits.
67	SQCK	I		Clock input for SQSO read-out.
68	MUTE	I		Mute at H; remove mute at L.
69	SENS	—	1,Z,0	SENS output. Outputs to CPU.
70	XRST	I		System reset input. Resets at "L".
71	DATA	I		Input of serial data from CPU.
72	XLAT	I		Input for latch from CPU. Latches serial data at release.
73	VDD			Power supply (+5V).
74	CLOK	I		Serial data transfer clock input from CPU.
75	SEIN	I		SENS input from SSP.
76	CNIN	I		Input of tracking pulse.
77	DATO	O	1,0	Serial data output to SSP.
78	XLTO	O	1,0	Serial data latch output to SSP.
79	CLKO	O	1,0	Serial data transfer clock output to SSP.
80	MIRR	I		Mirror signal input. Use for track jump for over 128 tracks, using autosequencer.

CXD2500AQ

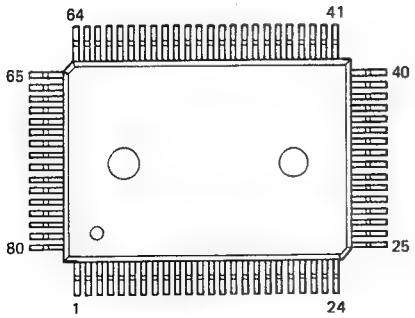

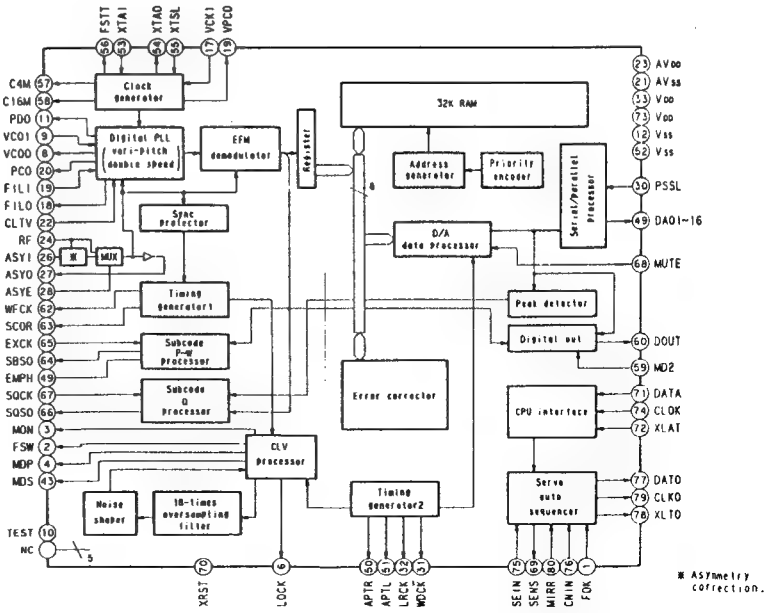

CXA1372Q Terminal Function

Terminal No.	Symbol	I/O	Terminal Function
1	Vc	I	Mid-point voltage input terminal.
2	FGD	I	In case of reducing higher range gain of focus servo, connect a capacitor between this terminal and terminal number (3).
3	FS3	I	Shifts higher range gain of focus servo by FS3 ON/OFF.
4	FLB	I	Terminal for external time constant to increase lower range of focus servo.
5	FEO	O	Focus drive output.
6	FE–	I	Reverse input terminal for focus amplifier.
7	SRCH	I	Terminal for external time constant to make focus search waveform.
8	TGU	I	Terminal for external time constant to shift higher range gain of tracking.
9	TG2	I	Terminal for external time constant to shift higher range gain of tracking.
10	AV_{CC}		
11	TAO	O	Tracking drive output.
12	TA–	I	Reverse input terminal for tracking amplifier.
13	SL+	I	Non-reverse input terminal for sled amplifier.
14	SLO	O	Sled drive output.
15	SL–	I	Reverse input terminal for sled amplifier.
16	FSET	I	Terminal to compensate peak in focus/tracking phase.
17	ISET	I	Delivers a current to set the height of focus search, track jump, and sled kick.
18	SSTOP	I	Terminal for limit switch ON/OFF to detect disc innermost circle.
19	AV_{EE}		
20	DIRC	I	Terminal is used at the time of 1 track jump. A 47 kohm pull up resistor is included.
21	LOCK	I	Reckless drive protection circuit of sled; activates at "L". A 47k ohm pull up resistor is included.
22	CLK	I	Serial data transfer clock input from CPU.
23	XLT	I	Latch input from CPU.
24	DATA	I	Serial data input from CPU.
25	XRST	I	Reset input terminal. Resets at "L".
26	C.OUT	O	Terminal to output signal for track number count.
27	SENS	O	Terminal to output FZC, ATSC, TZC, SSTOP by command from CPU.
28	D.GND		
29	MIRR	O	Output terminal for MIRR comparator.
30	DFCT	O	Output terminal for DEFECT comparator.
31	ASY	I	Input terminal for auto-asymmetry control.
32	EFM	O	Output terminal for EFM comparator.
33	FOK	O	Output terminal for focus OK (FOK) comparator.
34	CC1	O	DEFECT bottom hold output terminal.
35	CC2	I	Input terminal to input DEFECT bottom hold output by capacitance combination.
36	DV_{CC}		
37	CB	I	Capacitor connecting terminal for DEFECT bottom hold.
38	CP	I	MIRR hold capacitor connecting terminal. A non-reverse input terminal for MIRR comparator.
39	RFI	I	Input terminal to input RF summing amplifier output by capacitance combination.
40	RFO	O	Output terminal for RF summing amplifier. Check point for eye pattern.
41	DV_{EE}		
42	TZC	I	Tracking zero-cross comparator input terminal.
43	TE	I	Tracking error signal input terminal.
44	TDFCT	I	Capacitor connecting terminal for time constant at the time of defect.
45	ATSC	I	Input terminal of ATSC detecting window comparator.
46	FZC	I	Input terminal of focus zero-cross comparator.
47	FE	I	Focus error signal input terminal.
48	FDFCT	I	Capacitor connecting terminal for time constant at the time of defect.

CXA1372Q

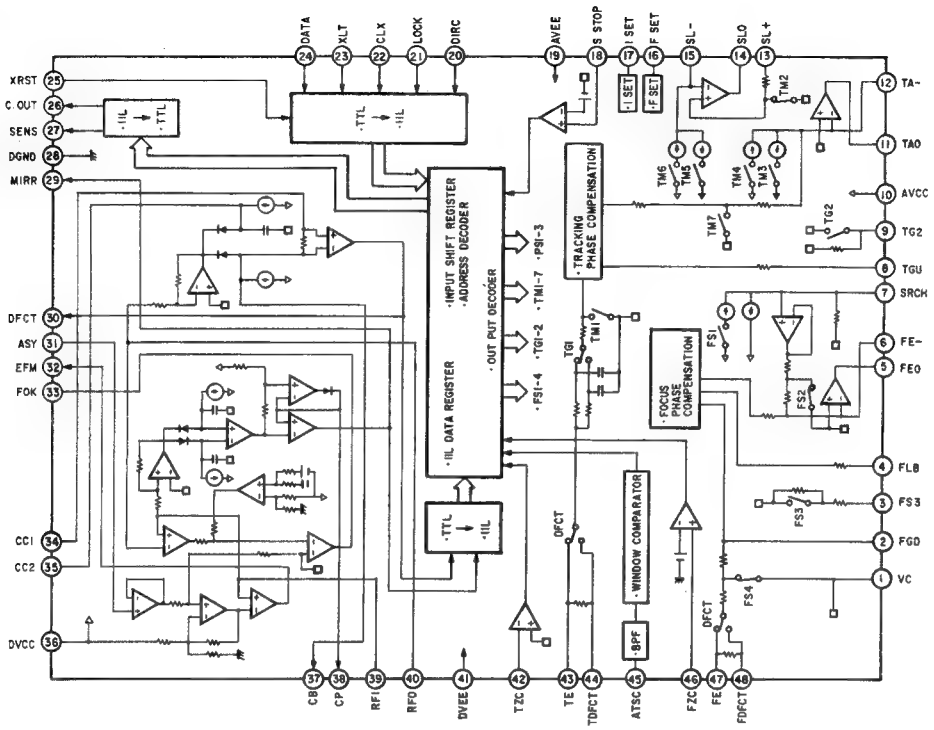
DATA
XLT
CLK
LOCK
DIRC
AVEE
S STOP
I SET
F SET
SL-
SLO
SL+
XRST
C OUT
SENS
DGND
MIRR
DFCT
ASY
EFM
FOK
CCI
CC2
DVCC
TA-
TAO
AVCC
TG2
TGU
SRCH
FE-
FEO
FLB
FS3
FGD
VC
CBC
CP
RFI
RFO
DVEE
TZC
TE
TDFCT
ATSC
FZC
FE
FDFCT
INPUT SHIFT REGISTER
ADDRESS DECODER
OUT PUT DECODER
IIL DATA REGISTER
TRACKING PHASE COMPENSATION
FOCUS PHASE COMPENSATION
WINDOW COMPARATOR
BPF

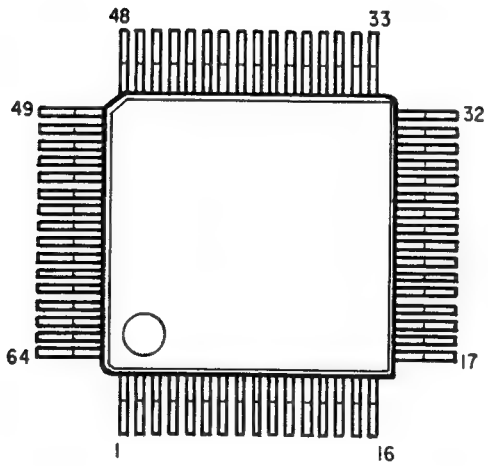
48
33
49
32
64
17
1
16

NE5532
RC4556D (RAY)

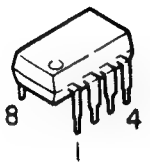

BA15218F
X24C00S
NJM2903M

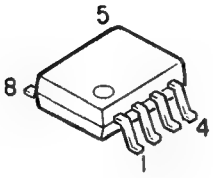

SN7438NS
TC74HC00AF
TC74HC32AF
TC74HCU04AF
SN74LS624NSR
HD74LSQ7FP

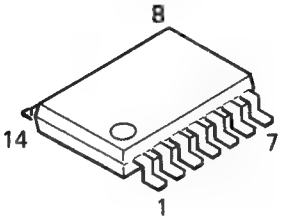

PCM61P-L

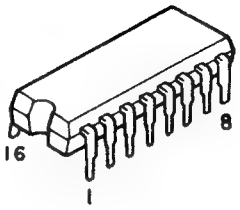

TC74HC123AF
TC74HC138AF
M5M34051FP

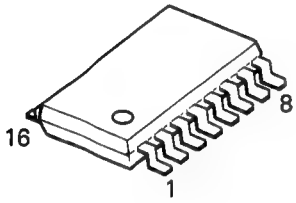

SN74HC645NSR
TC74HC573AF
TC74HC245AF
TC74HC574AF

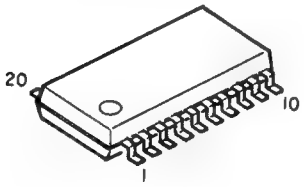

CXD2554MT

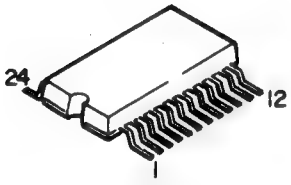

TMS44C256-80/10DJ

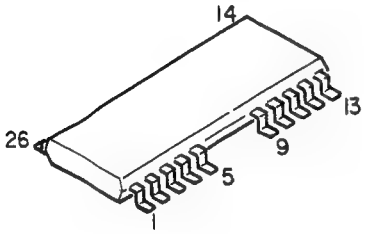

BA6296 FP-T1

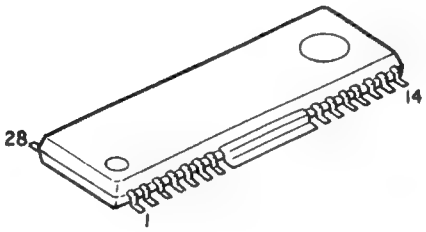

TA7256P

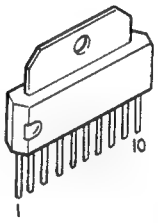

NJM78M05FA
NJM78M15FA

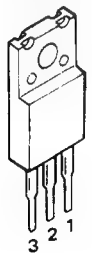

1 : Output
2 : Common
3 : Input

NJM79M05FA
NJM79M15FA

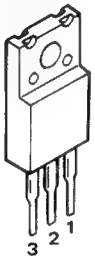

1 : Output
2 : Input
3 : Common

NJM78L05A

SI-3052V

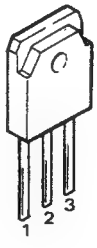

1 : Gnd
2 : Output
3 : Input

MN1382-S

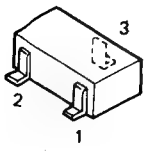

1 : VSS
2 : OUT
3 : VDD

● IC PROTECTOR
ICP-N38T
ICP-N25T

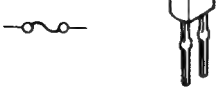

● TRANSISTORS

2SC2412K
2SA1036K
DTC343TK
DTC143TK
DTC143EK
DTA143EK

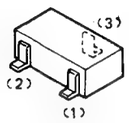

(1) GND/Emitter
(2) In/Base
(3) Out/Collector

DTC343TK

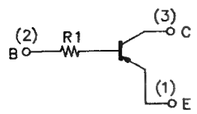

DTC143TK

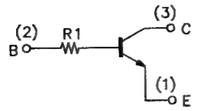

DTC143EK

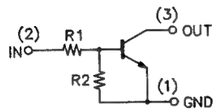

DTA143EK

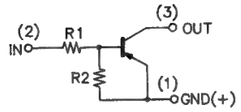

● DIODES

S1WB (A) 10

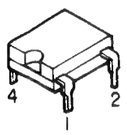

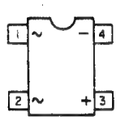

RBA-406B

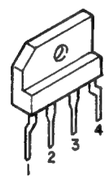

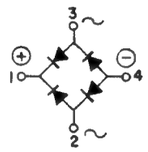

MA151A
MA151WA
MA151WK

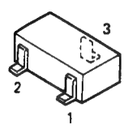

MA151A

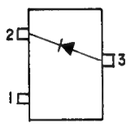

MA151WA

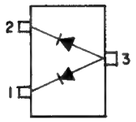

MA151WK

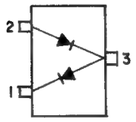

● LED

SLR-40VC3F (RED)

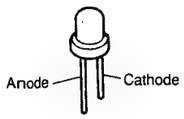

7LED SL2255-30 GRN
SL-1255-30 RED

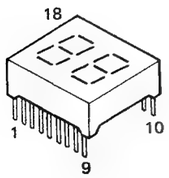

SL-1263-30

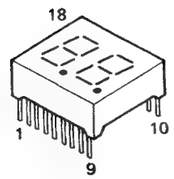

SCHEMATIC DIAGRAM (DISPLAY SECTION)

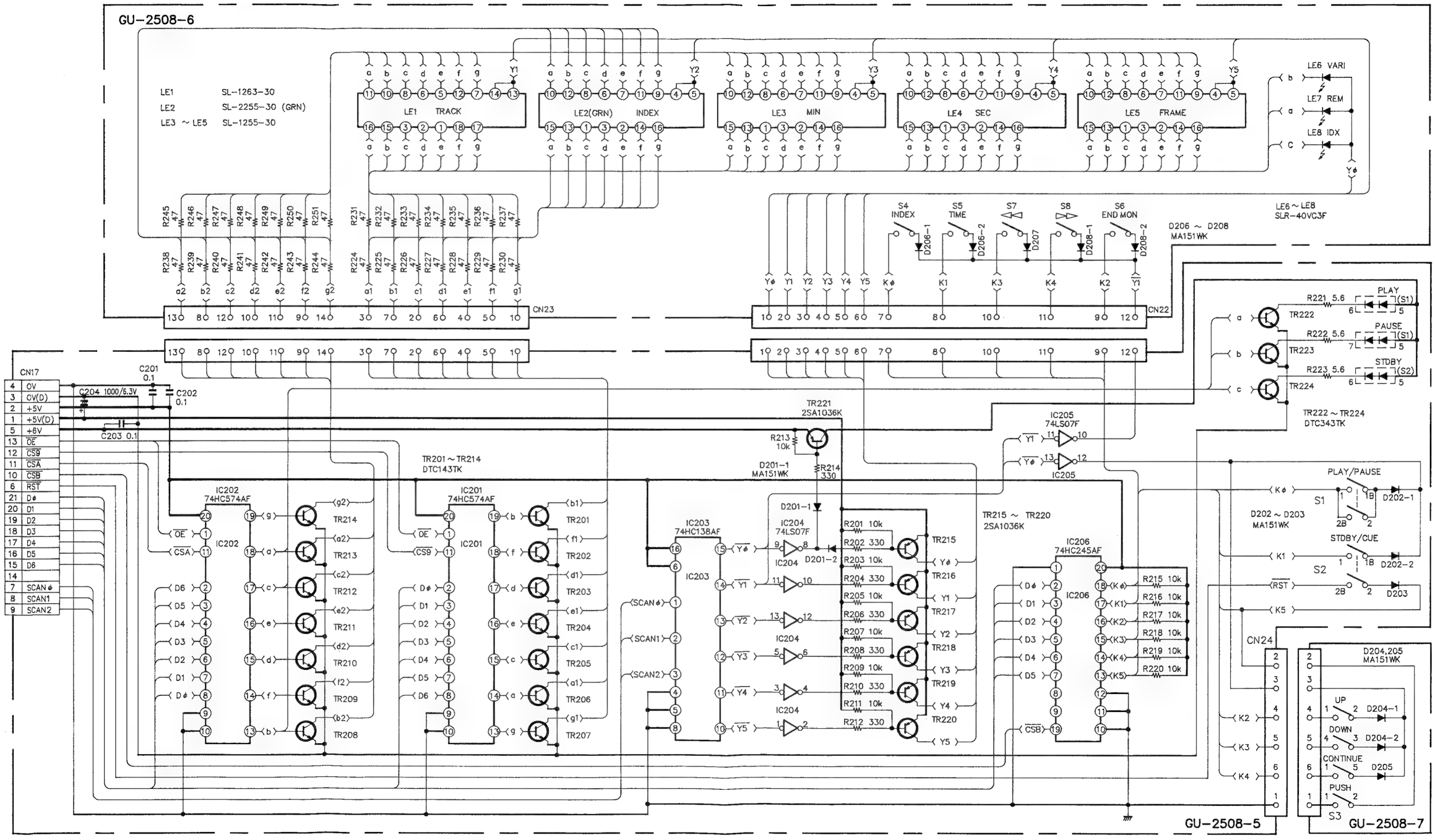

NOTES
ALL RESISTANCE VALUES IN OHM. k=1,000 OHM, M=1,000,000 OHM
ALL CAPACITANCE VALUES IN MICRO FARAD. P=MICRO-MICRO FARAD
EACH VOLTAGE AND CURRENT ARE MEASURED AT NO SIGNAL INPUT CONDITION.
CIRCUIT AND PARTS ARE SUBJECT TO CHANGE WITHOUT PRIOR NOTICE.

NOTE
——— +B LINE

SCHEMATIC DIAGRAM (SERVO SECTION)

1 2 3 4 5 6

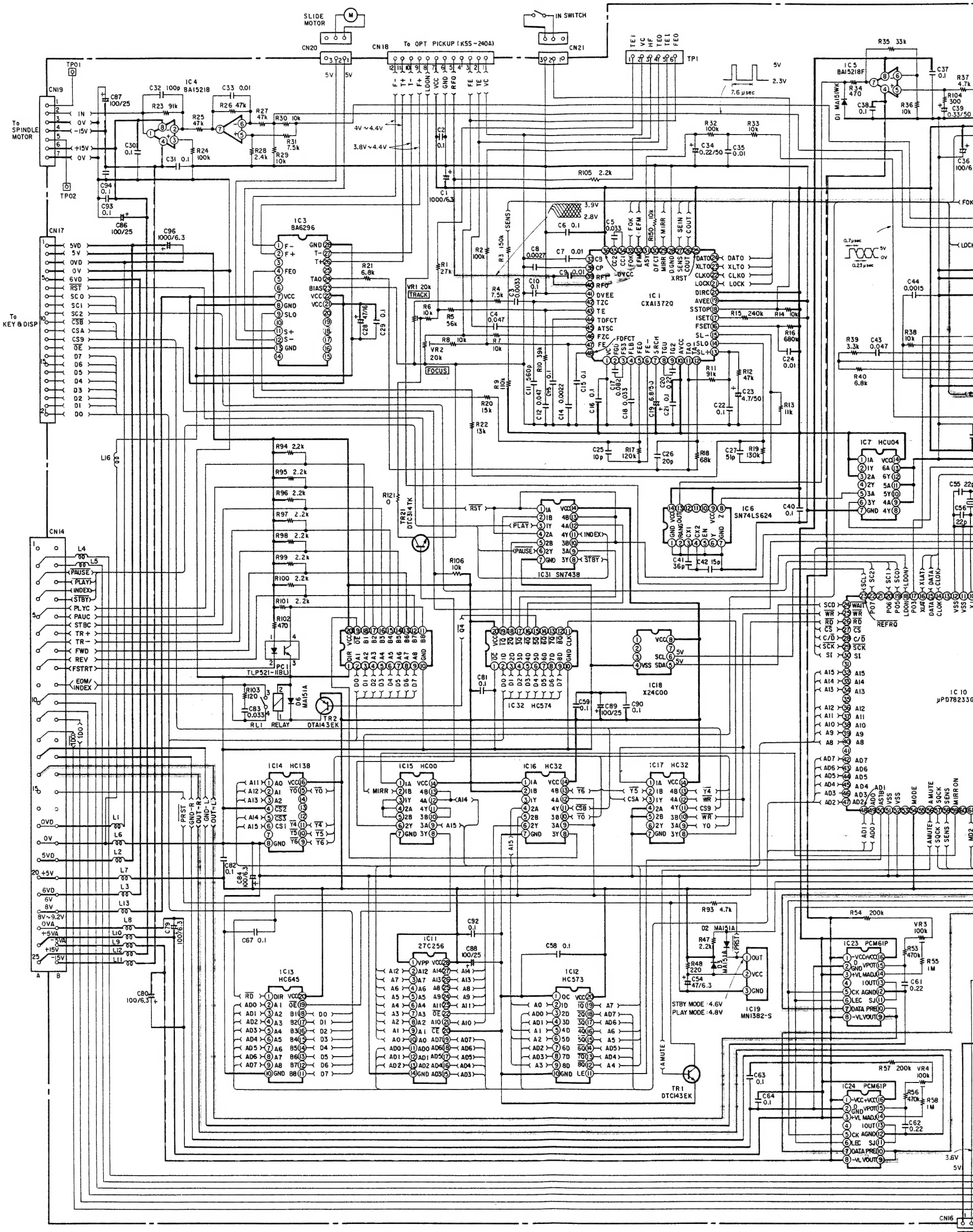

NOTES

ALL RESISTANCE VALUES IN OHM. k=1,000 OHM, M=1,000,000 OHM
ALL CAPACITANCE VALUES IN MICRO FARAD. P=MICRO-MICRO FARAD
EACH VOLTAGE AND CURRENT ARE MEASURED AT NO SIGNAL INPUT CONDITION.
CIRCUIT AND PARTS ARE SUBJECT TO CHANGE WITHOUT PRIOR NOTICE.

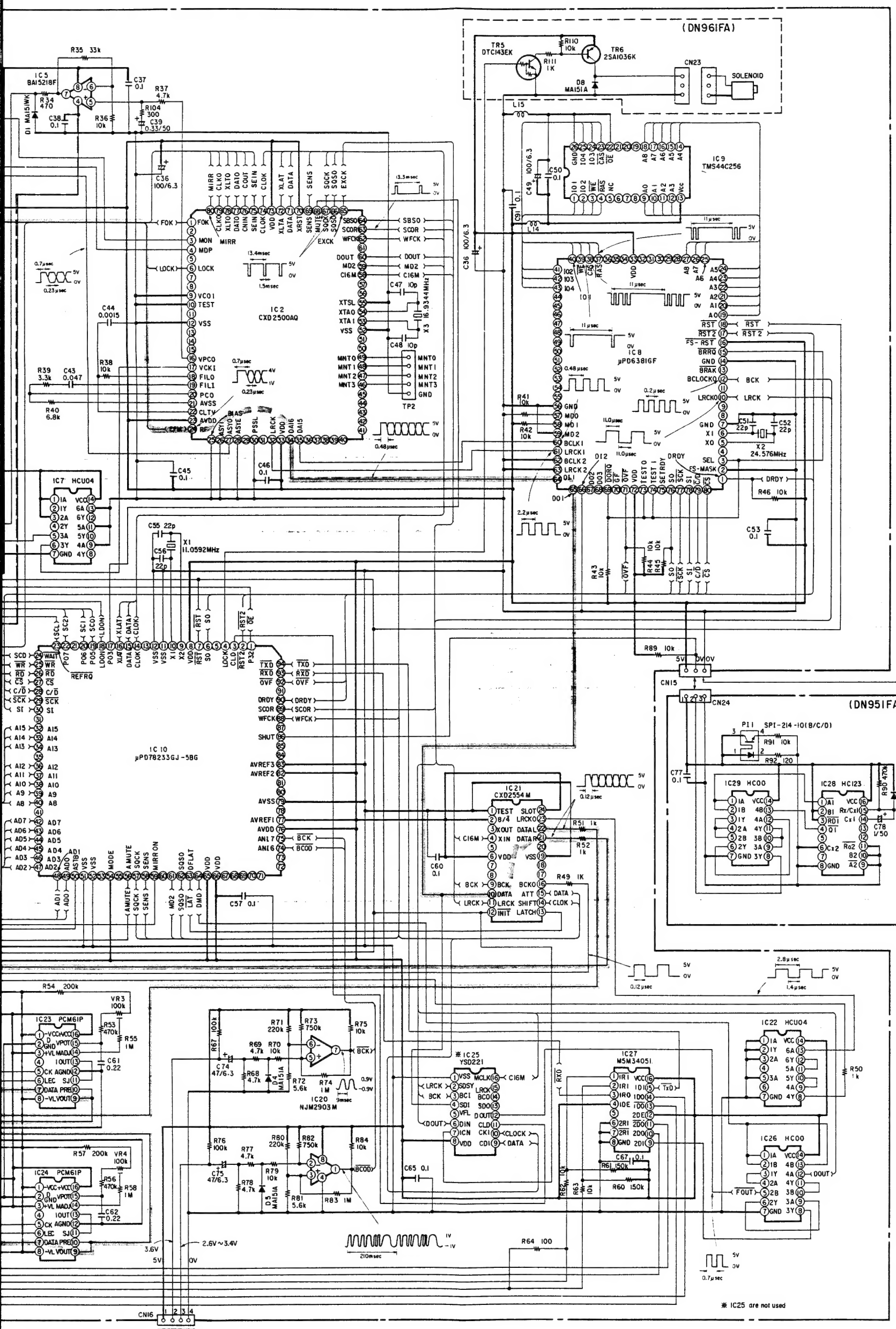
6
7
8
9
10
11
A
B
C
D
E
F
G
H
(DN961FA)
TR5 DTC143EK
TR6 2SA1036K
R110 10k
R111 1K
D8 MA151A
CN23
SOLENOID
IC5 BA15218F
R35 33k
R34 470
R37 4.7k
R104 300
C37 0.1
C38 0.1
R36 10k
C39 0.33/50
D1 MA151WK
C36 100/6.3
IC2 CXD2500AQ
IC9 TMS44C256
IC8 μPD6381GF
IC7 HCU04
IC10 μPD78233GJ-58G
IC21 CXD2554M
IC23 PCM61P
IC24 PCM61P
IC20 NJM2903M
IC25 YSD221
IC27 M5M34051
IC22 HCU04
IC26 HC00
IC29 HC00
IC28 HC123
X1 11.0592MHz
X2 24.576MHz
X3 16.9344MHz
TP2
CN15
CN24
CN22
P11 SPI-214-101(B/C/D)
S2 MICRO-SW (SCL-101P)
(DN951FA)
(DN961FA)
R89 10k
R46 10k
R53 470k
R55 1M
R56 470k
R57 200k
R58 1M
R54 200k
VR3 100k
VR4 100k
C61 0.22
C62 0.22
C74 47/6.3
C75 47/6.3
C65 0.1
C60 0.1
C57 0.1
C53 0.1
C45 0.1
C46 0.1
C55 22p
C56 22p
C47 10p
C48 10p
C51 22p
C52 22p
C77 0.1
C78 1/50
R90 470k
D7 MA151A
R91 10k
R92 120
R112 10k
R41 10k
R42 10k
R43 10k
R44 10k
R45 10k
R51 1k
R52 1k
R49 1K
R50 1k
R60 150k
R61 150k
R63 10k
R64 100
R71 220k
R73 750k
R75 10k
R76 100k
R77 4.7k
R78 4.7k
R79 10k
R80 220k
R81 5.6k
R82 750k
R83 1M
R84 10k
R67 100k
R68 4.7k
R69 4.7k
R70 10k
R72 5.6k
R74 1M
D4 MA151A
D5 MA151A
CN16
(DN951FA)
PR1, PR2 SPI-315-35 (A/B/C)
R85 1k
R86 1.2k
R87 1k
R88 1.2k
C76 0.1
+B LINE
−B LINE
AUDIO SIGNAL LINE
※ IC25 are not used

SCHEMATIC DIAGRAM (AUDIO SECTION)

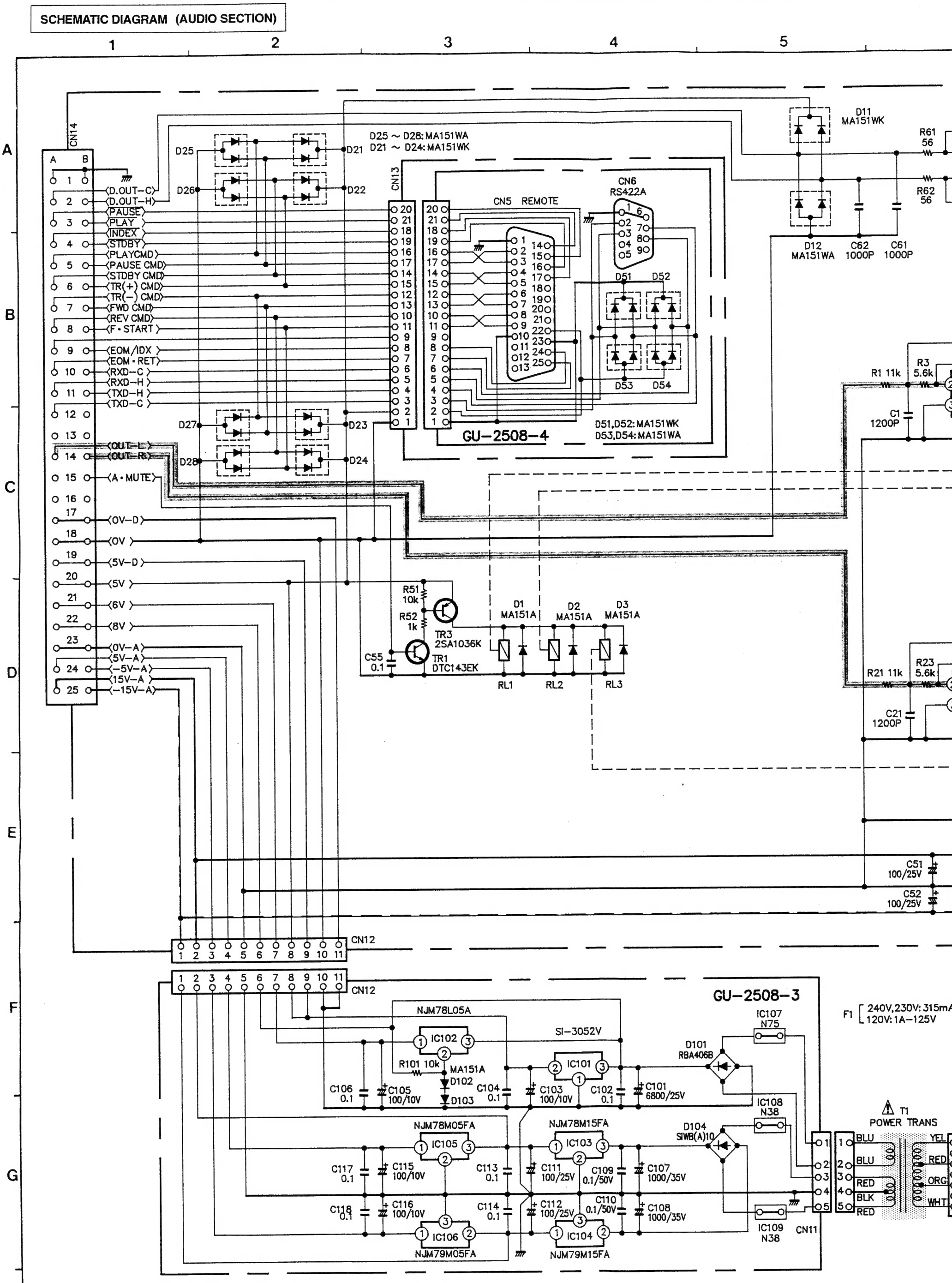

WARNING:
Parts marked with this symbol ⚠ ▨ have critical characteristics.
Use ONLY replacement parts recommended by the manufacturer.

NOTES
ALL RESISTANCE VALUES IN OHM. k=1,000 OHM, M=1,000,0
ALL CAPACITANCE VALUES IN MICRO FARAD. P=MICRO-MI
EACH VOLTAGE AND CURRENT ARE MEASURED AT NO SIG
CIRCUIT AND PARTS ARE SUBJECT TO CHANGE WITHOUT

6 7 8 9 10 11

D11
A151WK

R61 56
C65 0.01
C63 100/25V
C64 100/25V
R62 56
C66 0.01

C62 1000P
C61 1000P

CN4
DIGITAL OUT

BF11
BF12

IC1
BA15218F

R1 11k
R2 11k
R3 5.6k
C2 200P
IC1 (1/2)
C1 1200P
C3 220/16V (BP)
C7 0.1
VR1 1K(A)
LEVEL-L
C4 47P
C5 20P
R5 5.6k
R4 6.8k
IC1 (2/2)
C6 0.1

IC2
NE5532

C8 20P
R10 27k
R6 16k
IC2(1/2)
R8 10k
C13 0.1
C10 220/16V (BP)
R14 22
RL1
R12 10k
C14 0.1
C16 330P
R18 100k
BF1

R7 10k
C9 20P
R11 15k
IC2(2/2)
R9 22k
C12 0.1
C11 220/16V (BP)
R15 22
R16 1.2k
R17 1.2k
R13 10k
C15 0.1
C17 330P
R19 100k
BF2
BF3

CN2
LINE OUT-L

C18 0.1

IC3
BA15218F

R21 11k
R22 11k
R23 5.6k
C22 200P
IC3(1/2)
C21 1200P
C23 220/16V (BP)
C27 0.1
VR2 1K(A)
LEVEL-R
C24 47P
C25 20P
R25 5.6k
R24 6.8k
IC3(2/2)
C26 0.1

IC4
NE5532

C28 20P
R30 27k
R26 16k
IC4(1/2)
R28 10k
C33 0.1
C30 220/16V (BP)
R34 22
RL2
R32 10k
C34 0.1
C36 330P
R38 100k
BF7

R27 10k
C29 20P
R31 15k
IC4(2/2)
R29 22k
C32 0.1
C31 220/16V (BP)
R35 22
R36 1.2k
R37 1.2k
R33 10k
C35 0.1
C37 330P
R39 100k
BF8
BF9

CN3
LINE OUT-R

C38 0.1

IC5
NJM4556D

C41 20P
R45 39k
R41 10k
IC5(1/2)
R43 10k
C46 0.1
C43 100/16V (BP)
RL3
R47 220(1W)
R49 10k
C47 1000P
BF4
BF5

JK1
HEADPHONE

C42 20P
R46 39k
R42 10k
IC5(2/2)
R44 10k
C45 0.1
C44 100/16V (BP)
R48 220(1W)
R50 10k
C48 1000P
BF6

C49 0.1

C51 100/25V
C52 100/25V
C53 0.1
C54 0.1

GU-2508-1

240V 230V 120V

T1 [240V,230V: 315mA-250V
120V: 1A-125V

BLU RED ORG WHT
7 5 3 1

T1
POWER TRANS
BLU
BLU
RED
BLK
RED
YEL
RED
ORG
WHT

CN9
CN10

C121
0.01/400VAC

CN8
CN7

S1 POWER SW
RED
BLK

CN1 AC
BLK
WHT
L

GU-2508-2

NOTE
+B LINE
-B LINE
SIGNAL LINE

. k=1,000 OHM, M=1,000,000 OHM
CRO FARAD. P=MICRO-MICRO FARAD
RE MEASURED AT NO SIGNAL INPUT CONDITION.
CT TO CHANGE WITHOUT PRIOR NOTICE.